SPC45B23101DC2I

Juniper Networks® Compatible 10GBase-CWDM SFP+ Transceiver (SMF, 1450nm, 80km, LC, DOM, -40 to 85C)

Product Description

This Juniper Networks® compatible SFP+ transceiver provides 10GBase-CWDM throughput up to 80km over single-mode fiber (SMF) using a wavelength of 1450nm via an LC connector. It can operate at temperatures between -40 and 85C. It is guaranteed to be 100% compatible with the equivalent Juniper Networks® transceiver. This easy to install, hot swappable transceiver has been programmed, uniquely serialized and data-traffic and application tested to ensure that it will initialize and perform identically. Digital optical monitoring (DOM) support is also present to allow access to real-time operating parameters. We stand behind the quality of our products and proudly offer a limited lifetime warranty.

Skylane's transceivers are RoHS compliant and lead-free.

Features:

- SFF-8432 and SFF-8472 Compliance
- Duplex LC Connector
- Industrial Temperature -40 to 85 Celsius
- Single-mode Fiber
- Hot Pluggable
- Excellent ESD Protection
- Metal with Lower EMI
- RoHS Compliant and Lead Free

Applications:

- 10x Gigabit Ethernet over CWDM
- Access, Metro and Enterprise
- 8x/10x Fibre Channel
- Mobile Fronthaul CPRI/OBSAI

For your product safety, please read the following information carefully before any manipulation of the transceiver:

ESD

This transceiver is specified as ESD threshold 1kV for SFI pins and 2kV for all others electrical input pins, tested per MIL-STD-883G, Method 3015.4 /JESD22-A114-A (HBM). However, normal ESD precautions are still required during the handling of this module.

LASER SAFETY

This is a Class1 Laser Product according to IEC 60825-1:2007. This product complies with 21 CFR 1040.10 and 1040.11 except for deviations pursuant to Laser Notice No. 50, dated (June 24, 2007).

The optical ports of the module need to be terminated with an optical connector or with a dust plug in order to avoid contamination.

CWDM Wavelengths

Wavelengths	Min.	Typ.	Max.
27	1264.5	1271	1277.5
29	1284.5	1291	1297.5
31	1304.5	1311	1317.5
33	1324.5	1331	1337.5
35	1344.5	1351	1357.5
37	1364.5	1371	1377.5
39	1384.5	1391	1397.5
41	1404.5	1411	1417.5
43	1424.5	1431	1437.5
45	1444.5	1451	1457.5

Absolute Maximum Ratings

Parameter	Symbol	Min.	Typ.	Max.	Unit	Notes
Data Rate				10.3125	Gbps	
Link Budget		24			dB	
Operating Case Temperature	Tc	-40		85	℃	
Storage Temperature	Tstg	-40		85	℃	
Maximum Voltage	Vcc	-0.5		3.6	V	
Relative Humidity (Non-Condensing)	RH	5		85	%	

Notes:

1. Exceeding any one of these values may destroy the device permanently.

Electrical Characteristics

Parameter		Symbol	Min.	Typ.	Max.	Unit	Notes
Supply Voltage		Vcc	3.13	3.3	3.47	V	
Supply Current		Icc			450	mA	
Transmitter							
Differential Data Input Swing		VIN	150		1200	mVp-p	1
Differential Input Impedance		ZIN	85	100	115	Ω	2
Tx_Disable	**High**		2		Vcc	V	
	Low		0		0.8		
Tx_Fault	**High**		2		Vcc+0.3	V	3
	Low		0		0.8		4
Receiver							

Differential CML Outputs		VOUT	350		700	mVp-p	1
Differential Output Impedance		ZOUT	85	100	115	Ω	
Rx_LOS	**High**		2		Vcc+0.3	V	3
	Low		0		0.8		4
MOD_DEF (0.2)		VOH	2.5			V	5
		VOL	0		0.5		

Notes:

1. AC coupled inputs.
2. RIN > 100kΩ @ DC.
3. Io = 400µA; Host_Vcc.
4. Io = -4.0mA.
5. With serial ID.

Optical Characteristics

Parameter	Symbol	Min.	Typ.	Max.	Unit	Notes
Transmitter						
Center Wavelength	λC	λC - 6.5		λC + 6.5	nm	
Spectral Width (-20dB)	Δλ			1	nm	
Average Output Power	POUT	2		7	dBm	1
Extinction Ratio	ER	3.5			dB	
Average Power of Off Transmitter	Poff			-30	dB	
Side-Mode Suppression Ratio	SMSR	30			dB	
Relative Intensity Noise	RIN			-128	dB/Hz	
Receiver						
Optical Center Wavelength	λC	1260		1620	nm	
Receiver Sensitivity	Pmin			-22	dBm	2
Receiver Overload	Pmax	-7			dBm	
LOS De-Assert	LOSD			-23	dBm	
LOS Assert	LOSA	-36			dBm	
LOS Hysteresis	LOSH	0.5			dB	

Notes:

1. Output power is coupled into a 9/125µm SMF.
2. Minimum average optical power, measured at BER less than $1E^{-12}$. The measure pattern is PRBS 2^{31}-1.

Pin Descriptions

Pin	Symbol	Name/Description	Plug Seq.	Notes
1	VeeT	Transmitter Ground.	1	5
2	Tx_Fault	Transmitter Fault Indication.	3	1
3	Tx_Disable	Transmitter Disable. Module disables on “high” or “open.”	3	2
4	SDA	Module Definition 2. 2-wire serial ID interface.	3	3
5	SCL	Module Definition 1. 2-wire serial ID interface.	3	3
6	MOD_ABS	Module Absent.	3	3
7	RS0	Rx Rate Select (LVTTL). NC (pin not used).	3	
8	LOS	Loss of Signal.	3	4
9	RS1	Tx Rate Select (LVTTL). NC (pin not used).	1	
10	VeeR	Receiver Ground.	1	5
11	VeeR	Receiver Ground.	1	5
12	RD-	Inverted Received Data Out.	3	6
13	RD+	Received Data Out.	3	6
14	VeeR	Receiver Ground.	1	5
15	VccR	3.3V±5% Receiver Power.	2	7
16	VccT	3.3V±5% Transmitter Power.	2	7
17	VeeT	Transmitter Ground.	1	5
18	TD+	Transmit Data In.	3	8
19	TD-	Inverted Transmit Data In.	3	8
20	VeeT	Transmitter Ground.	1	5

Notes

1. Tx_Fault is an open collector/drain output that should be pulled up with a 4.7kΩ to 10kΩ resistor on the host board. When “high,” output indicates a laser fault of some kind. “Low” indicates normal operation. In the “low” state, the output will be pulled to <0.8V.
2. Tx_Disable is an input that is used to shut down the transmitter optical output. It is pulled up within the module with a 4.7kΩ to 10kΩ resistor. It states are:
   Low (0V-0.8V): Transmitter On
   (>0.8V, <2.0V): Undefined
   High (2.0V – 3.465V): Transmitter Disabled
   Open: Transmitter Disabled.
3. Modulation Absent. Connected to the VeeT or VeeR in the module.
4. LOS (Loss of Signal) is an open collector/drain output that should be pulled up with a 4.7kΩ to 10kΩ resistor. When “high,” this output indicates that the received optical power is below the worst-case receiver sensitivity (as defined by the standard in use). “Low” indicates normal operation. In the “low” state, the output will be pulled to <0.8V.
5. VeeR and VeeT may be internally connected within the SFP module.
6. RD-/+. These are the differential receiver outputs. They are AC-coupled, 100Ω differential lines that should be terminated with 100Ω (differential) at the user SERDES.
7. VccR and VccT are the receiver and transmitter power supplies. They are defined as 3.3V±5% at the SFP connector pin.
8. TD-/+. These are the differential transmitter inputs. They are AC-coupled, differential lines with 100Ω differential termination inside the module.

Pin-Out Details

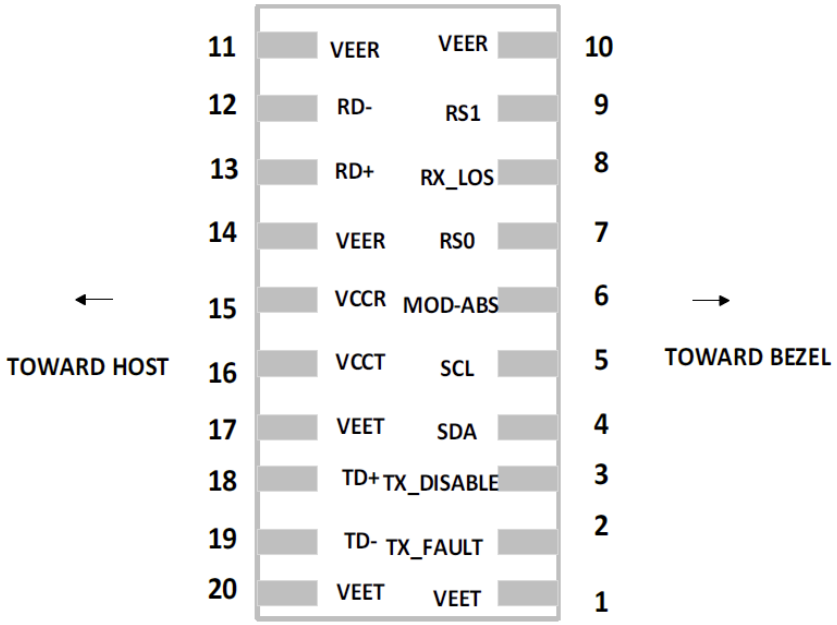

Recommended Circuit Schematic

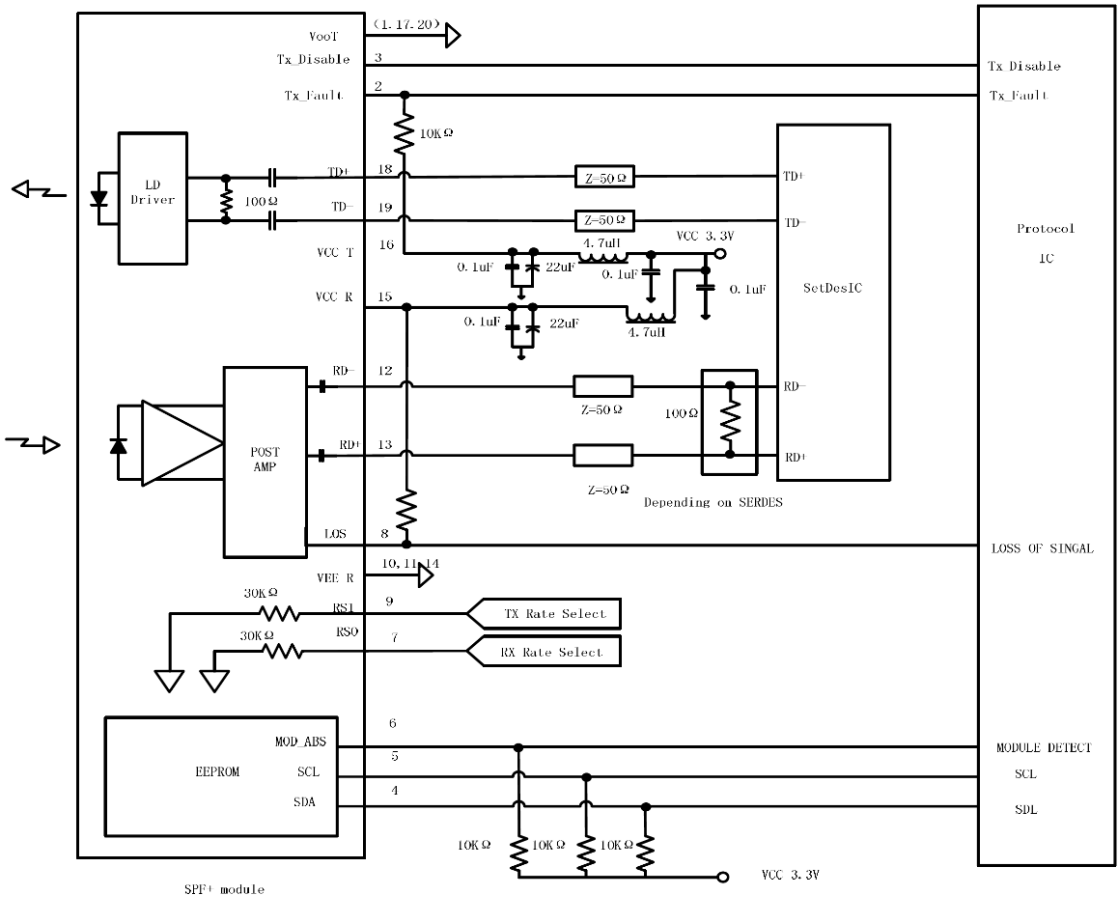

Mechanical Specifications

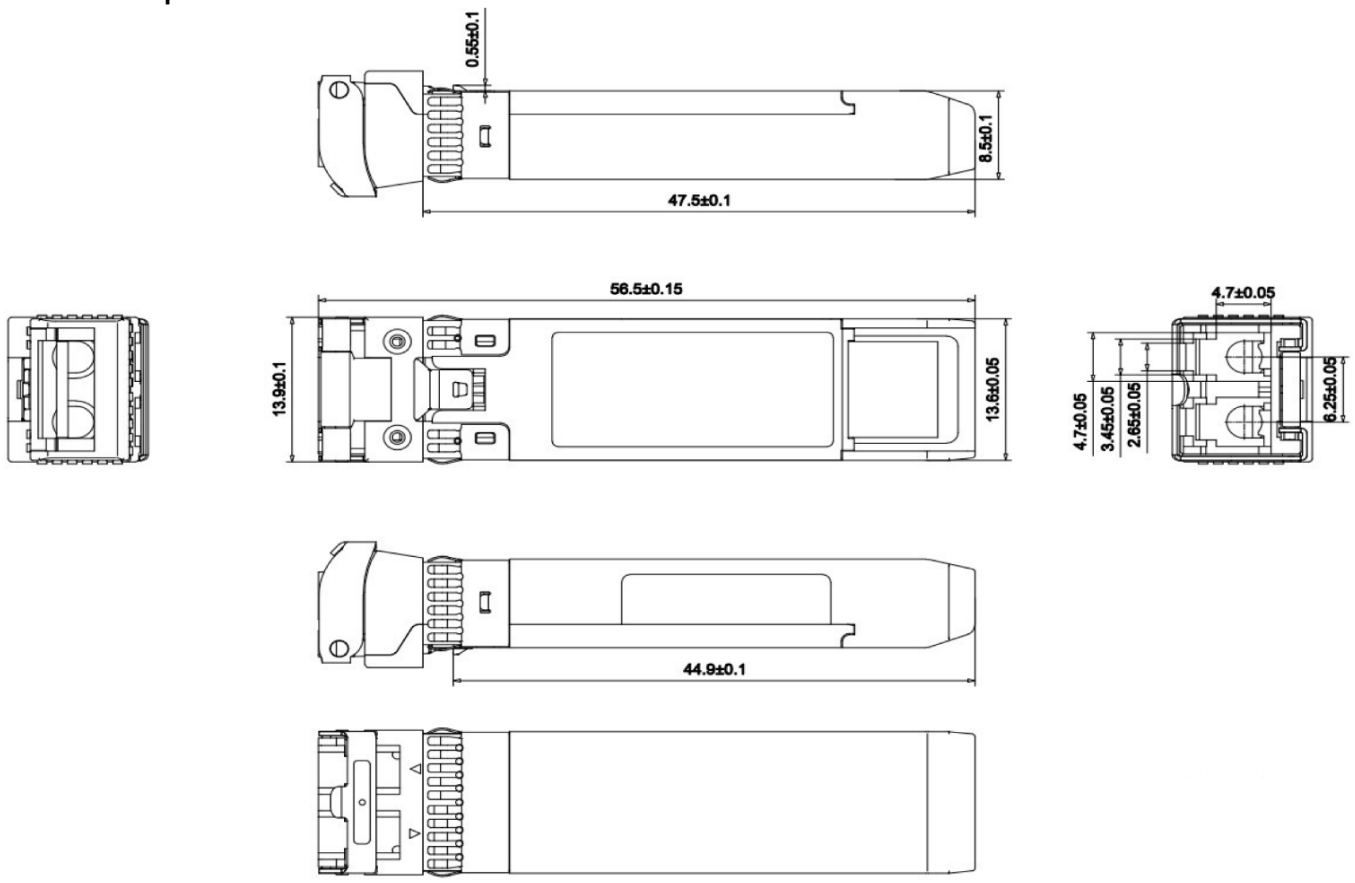

About Skylane Optics

Skylane is a leading provider of transceivers for optical communication.

We offer an extensive portfolio for the enterprise, access, datacenter and metropolitan fiber optical market as well as for smart home applications and home networks.

We cover the European, South American and North American market with a strong partner network and have offices in Belgium, Brazil, Sweden and USA.

Our offerings are characterized by high quality and performance. In combination with our strong technical support, we enable our customers to build cost optimized network solutions.

We offer an extensive range of high-quality products including transceivers (Optical and copper), Active Optical Cable (AOC), Direct Attach Cable (DAC), Mux/Demux, Coding Box.