SKYLANE OPTICS®

# SPB23060102B139

Cisco® SFP-10G-BX60U-I Compatible 10GBase-BX SFP+ Transceiver (SMF, 1270nmTx/1330nmRx, 60km, LC, DOM, -40 to 85C)

## Product Description

This Cisco® SFP-10G-BX60U-I compatible SFP+ transceiver provides 10GBase-BX throughput up to 60km over single-mode fiber (SMF) using a wavelength of 1270nmTx/1330nmRx via an LC connector. This bidirectional unit must be used with another transceiver or network appliance of complementing wavelengths. It is capable of withstanding rugged environments and can operate at temperatures between -40 and 85C. Our transceiver is built to meet or exceed OEM specifications and is guaranteed to be 100% compatible with Cisco®. It has been programmed, uniquely serialized, and tested for data-traffic and application to ensure that it will initialize and perform identically. All of our transceivers comply with Multi-Source Agreement (MSA) standards to provide seamless network integration. We stand behind the quality of our products and proudly offer a limited lifetime warranty.

Skylane's transceivers are RoHS compliant and lead-free.

## Features:

- SFF-8432 and SFF-8472 Compliance
- Uncooled DFB transmitter and APD receiver
- Simplex LC Connector
- Industrial Temperature -40 to 85 Celsius
- Hot Pluggable
- Single-mode Fiber
- Excellent ESD Protection
- Metal with Lower EMI
- RoHS Compliant and Lead Free

## Applications:

- 10GBase-BX Ethernet
- Access, Metro and Enterprise
- 8x/10x Fibre Channel

*For your product safety, please read the following information carefully before any manipulation of the transceiver:*

*ESD*
*This transceiver is specified as ESD threshold 1kV for SFI pins and 2kV for all others electrical input pins, tested per MIL-STD-883G, Method 3015.4 /JESD22-A114-A (HBM). However, normal ESD precautions are still required during the handling of this module.*

*LASER SAFETY*
*This is a Class1 Laser Product according to IEC 60825-1:2007. This product complies with 21 CFR 1040.10 and 1040.11 except for deviations pursuant to Laser Notice No. 50, dated (June 24, 2007).*

***The optical ports of the module need to be terminated with an optical connector or with a dust plug in order to avoid contamination.***

## Absolute Maximum Ratings

| Parameter | Symbol | Min. | Max. | Unit |
|---|---|---|---|---|
| **Maximum Supply Voltage** | Vcc | -0.5 | 4.0 | V |
| **Storage Temperature** | TS | -40 | 85 | °C |
| **Operating Case Temperature** | Tc | -40 | 85 | °C |
| **Operating Humidity** | RH | 5 | 85 | % |
| **Receiver Power** | $R_{MAX}$ | | -6 | dBm |
| **Maximum Bitrate** | $B_{max}$ | | 11.3 | Gbps |

## Electrical Characteristics (TOP=25°C, Vcc=3.3Volts)

| Parameter | Symbol | Min. | Typ. | Max. | Unit | Notes |
|---|---|---|---|---|---|---|
| **Power Supply Voltage** | Vcc | 3.15 | 3.30 | 3.43 | V | |
| **Power Supply Current** | Icc | | | 303 | mA | |
| **Power Consumption** | $P_{DISS}$ | | | 1 | W | |
| **Transmitter** | | | | | | |
| **Differential data input swing** | Vin,pp | 120 | | 850 | mV | |
| **Input differential impedance** | Zin | 80 | 100 | 120 | Ω | |
| **Receiver** | | | | | | |
| **Differential data output swing** | Vout, pp | 300 | | 850 | mV | |
| **Output differential impedance** | Zin | 80 | 100 | 120 | Ω | |

## Optical Characteristics

| Parameter | Symbol | Min. | Typ. | Max. | Unit | Notes |
|---|---|---|---|---|---|---|
| **Transmitter** | | | | | | |
| **Optical Power (average)** | $P_{AVE}$ | 1 | | 6 | dBm | 1 |
| **Transmitter and Dispersion Penalty** | TDP | | | 1 | dB | |
| **Optical Extinction Ratio** | ER | 3.5 | | | dB | |
| **Optical Wavelength** | Tλ | 1260 | 1270 | 1280 | nm | |
| **Insertion loss** | IL | | 1.2 | | | |
| **Receiver** | | | | | | |
| **Receiver Sensitivity (average)** | $R_{AVE}$ | | | -20 | dBm | 2 |
| **Receiver overload** | $P_{max}$ | -6 | | | dBm | 3 |
| **Receiver wavelength** | Rλ | 1320 | | 1340 | nm | |

**Notes:**

1. Coupled into a Single-mode fibre
2. Average power, back-to-back, @10.31Gbps, BER 1E-12, PRBS 231-1.
3. Exceeding the Receiver overload can physically damage the module. Please use appropriate attenuation.

**Pin Descriptions**

| Pin | Symbol | Name/Descriptions | Ref. |
|---|---|---|---|
| **1** | VeeT | Transmitter Ground (Common with Receiver Ground). | 1 |
| **2** | TX Fault | Transmitter Fault. LVTTL-O | 2 |
| **3** | TX Disable | Transmitter Disable. Laser output disabled on high or open. LVTT-I. | 3 |
| **4** | SDA | 2-Wire Serial Interface Data Line (Same as MOD-DEF2 in INF-8074i). LVTTL-I/O. | |
| **5** | SCL | 2-Wire Serial Interface Data Line (Same as MOD-DEF2 in INF-8074i). LVTTL-I. | |
| **6** | MOD_ABS | Module Absent, Connect to VeeT or VeeR in Module. | 4 |
| **7** | RS0 | Rate Select 0. Not used | 5 |
| **8** | LOS | Loss of Signal indication. Logic 0 indicates normal operation. LVTTL-O. | 2 |
| **9** | RS1 | Rate Select 1. Not used | 5 |
| **10** | VeeR | Receiver Ground (Common with Transmitter Ground). | 1 |
| **11** | VeeR | Receiver Ground (Common with Transmitter Ground). | 1 |
| **12** | RD- | Receiver Inverted DATA out. AC Coupled. CML-O. | |
| **13** | RD+ | Receiver Non-inverted DATA out. AC Coupled. CML-O. | |
| **14** | VeeR | Receiver Ground (Common with Transmitter Ground). | 1 |
| **15** | VccR | Receiver Power Supply. | |
| **16** | VccT | Transmitter Power Supply. | |
| **17** | VeeT | Transmitter Ground (Common with Receiver Ground). | 1 |
| **18** | TD+ | Transmitter Non-Inverted DATA in. AC Coupled. CML-I. | |
| **19** | TD- | Transmitter Inverted DATA in. AC Coupled. CML-O. | |
| **20** | VeeT | Transmitter Ground (Common with Receiver Ground). | 1 |

**Notes:**

1. The module signal ground contacts, VeeR and VeeT, should be isolated from the module case.
2. This contact is an open collector/drain output and should be pulled up to the Vcc_Host with resister in the range 4.7KΩ to 10KΩ. Pull ups can be connected to one or several power supplies, however the host board design shall ensure that no module contract has voltage exceeding module VccT/R +0.5.V.
3. Tx_Disable is an input contact with a 4.7KΩ to 10KΩ pull-up resistor to VccT inside module.
4. Mod_ABS is connected to VeeT or VeeR in the SFP+ module. The host may pull the contract up to Vcc_Host with a resistor in the range from 4.7KΩ to 10KΩ. Mod_ABS is asserted “High” when the SFP+ module is physically absent from a host slot.

5. Internally pulled down per SFF-8431

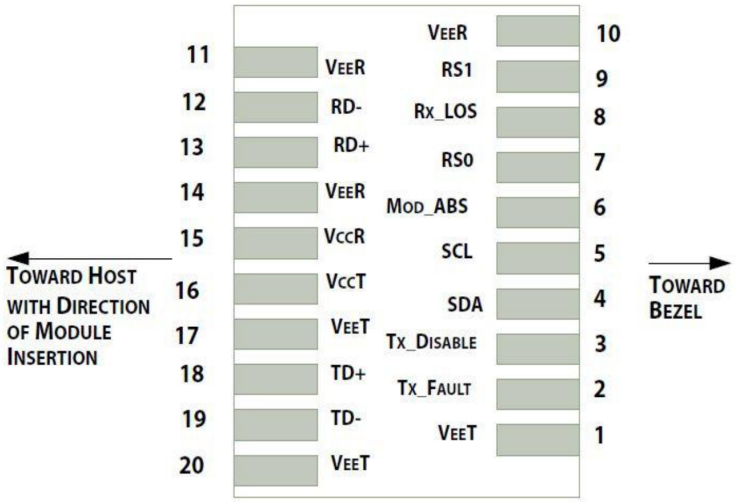


Pin-out of connector Block on Host board

**Recommended Circuit Schematic**

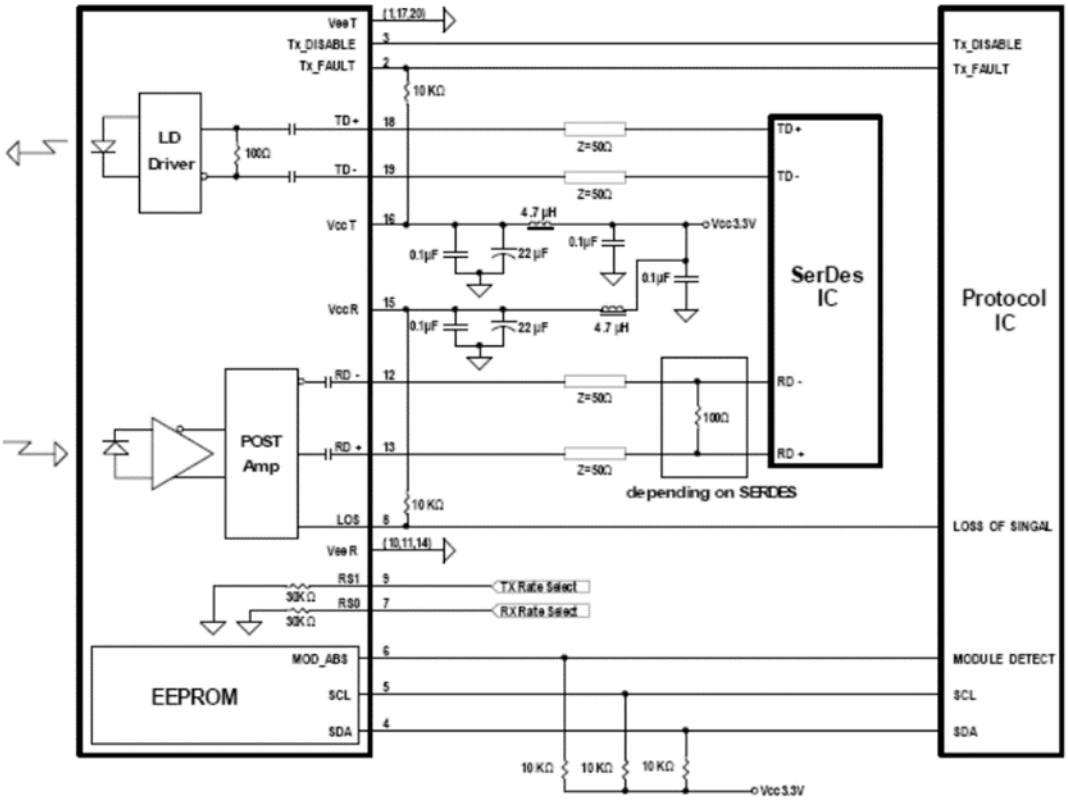

**Mechanical Specifications**

Small Form Factor Pluggable (SFP) transceivers are compatible with the dimensions defined by the SFP Multi-Sourcing Agreement (MSA).

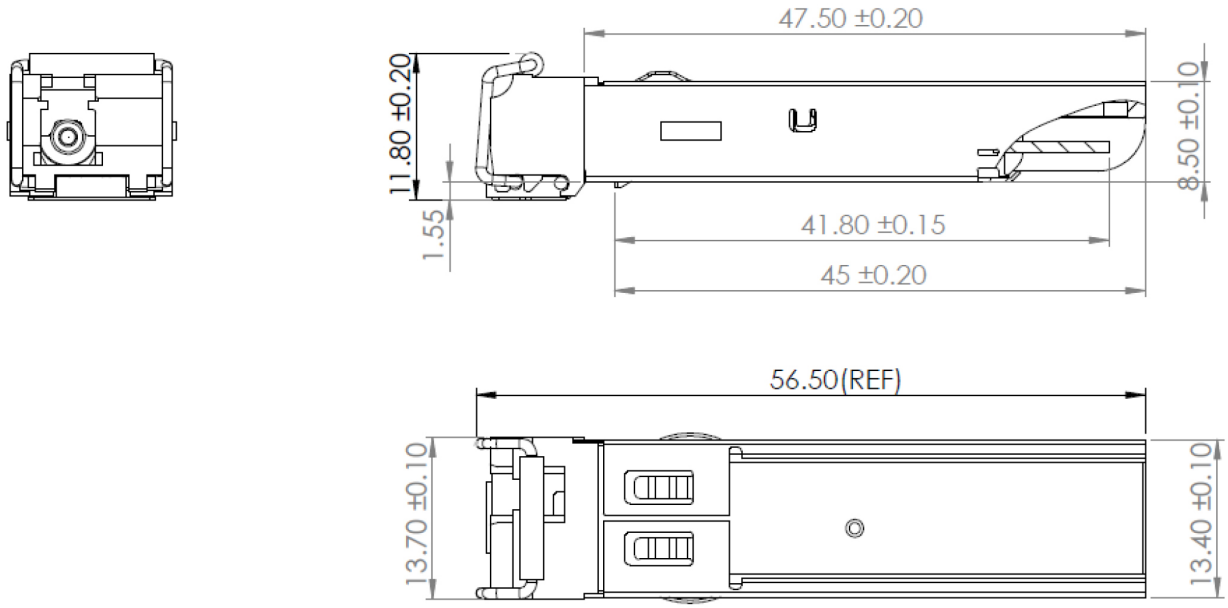


**EEPROM Information**

EEPROM memory map specific data field description is as below:

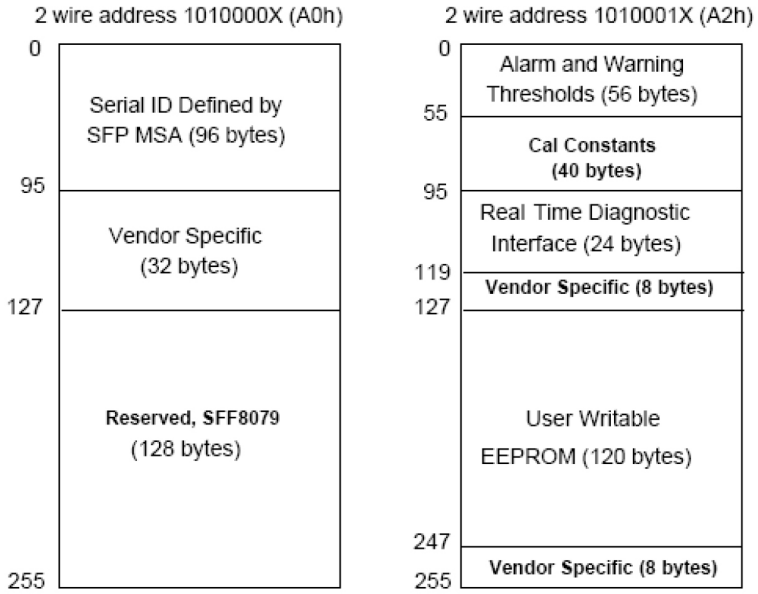

# About Skylane Optics

Skylane is a leading provider of transceivers for optical communication.

We offer an extensive portfolio for the enterprise, access, datacenter and metropolitan fiber optical market as well as for smart home applications and home networks.

We cover the European, South American and North American market with a strong partner network and have offices in Belgium, Brazil, Sweden and USA.

Our offerings are characterized by high quality and performance. In combination with our strong technical support, we enable our customers to build cost optimized network solutions.

We offer an extensive range of high-quality products including transceivers (Optical and copper), Active Optical Cable (AOC), Direct Attach Cable (DAC), Mux/Demux, Coding Box.