SKY-QDE4SFT-AOC1M

Dell® to Fortinet® Compatible 40GBase-AOC QSFP+ to 4xSFP+ Active Optical Cable (850nm, MMF, 1m)

Product Description

This Dell® to Fortinet® dual OEM compatible 40GBase-AOC QSFP+ to 4xSFP+ active optical cable has a maximum reach of 1.0m (3.3ft). It is 100% Dell® to Fortinet® compatible and has been programmed, uniquely serialized, data-traffic and application tested to ensure that it is compliant and functional. This active optical cable will initialize and perform identically to Dell® to Fortinet®'s individual cables and is built to meet or exceed Dell® to Fortinet®'s specifications. This product complies with MSA (Multi-Source Agreement) standards. We stand behind the quality of our products and proudly offer a limited lifetime warranty.

Skylane's transceivers are RoHS compliant and lead-free.

Features:

- Compliant to Standard SFF-8436 for QSFP+ and Standard SFF-8431 for SFP+
- Reliable VCSEL and PIN Photonic Devices
- High-Speed/High-Density: Supports up to 4x100Gbps Bi-Directional Operation
- Excellent High-Speed Signal Integrity
- Operating Case Temperature: 0 to 70 Celsius
- I2C Standard Management Interface
- RoHS Compliant and Lead-Free

Applications:

- 10G/40G Ethernet
- High Performance Computing, Server and Data Storage
- Proprietary High-Speed/High-Density Data

For your product safety, please read the following information carefully before any manipulation of the transceiver:

ESD

This transceiver is specified as ESD threshold 1kV for SFI pins and 2kV for all others electrical input pins, tested per MIL-STD-883G, Method 3015.4 /JESD22-A114-A (HBM). However, normal ESD precautions are still required during the handling of this module.

LASER SAFETY

This is a Class1 Laser Product according to IEC 60825-1:2007. This product complies with 21 CFR 1040.10 and 1040.11 except for deviations pursuant to Laser Notice No. 50, dated (June 24, 2007).

The optical ports of the module need to be terminated with an optical connector or with a dust plug in order to avoid contamination.

Absolute Maximum Ratings

Parameter	Symbol	Min.	Typ.	Max.	Unit	Notes
Storage Temperature	Tstg	-40		85	˚C	
Operating Temperature	Tc	0	25	70	˚C	
Relative Humidity	RH	5		85	???	
Maximum Supply Voltage	Vcc	0		3.6	V	

Electrical Specifications

Parameter	Symbol	Min.	Typ.	Max.	Unit	Notes
Power Supply Voltage	Vcc	3.135	3.3	3.465	V	
Data Rate ter Channel				4*10.3	Gbps	
LowΠSpeed Output: Transmitter Fault (Tx_Fault)/Loss of Signal (LOS)	VhH	2.0		Vcc	V	1
	VhL	0		0.8	V	1
LowΠSpeed Input: Transmitter Disable (Tx_Disable), Mh5_D9C1, Mh5_D9C2	VLH	2.0		Vcc	V	2
	VLL	0		0.8	V	2
Clock Rate - I2C	f			400	kHz	3
Module Turn On Time				2000	ms	4

Notes:

1. For all control input pins: LPMode, Reset, and ModSeIL.
2. For all status output pins: ModPrsL and IntL.
3. For the management interface.
4. Time from module power on/insertion/ResetL de-assert to module fully functional.

Optical Characteristics

Parameter	Symbol	Min.	Typ.	Max.	Unit	Notes
Transmitter						
Reference Differential Input Impedance	Zd		100		Ω	1
Optical Return Loss Tolerance				12	dB	
Differential Data Input Swing	VIN,pp	180		1200	mV	
Differential Data Input Threshold			50		mV	2
Receiver						
Reference Differential Input Impedance	Zd		100		Ω	1
Differential Data Output Swing	VOUT,pp	0		800	mV	
Pre-Emphasis Pulse Amplitude Percentage		0			%	3
		10			%	
		20			%	
		40			%	
Pre-Emphasis Pulse Duration			30		ps	
Signal Speed			4*10.3		Gbps	
Differential Data Output Swing		150		850	mV	
Differential Data Output Swing When Squelched				50	mV	
Rise/Fall Time		24			ps	

Notes:

1. AC coupled inside the AOC module.
2. Input swing to trigger Tx_Squelch.
3. User-selectable. Percentage is the ratio of pre-emphasis amplitude to output swing.

Pin Descriptions (QSFP+ End)

Pin	Symbol	Name/Description	Notes
1	GND	Transmitter Ground (Common with Receiver Ground).	1
2	Tx2-	Transmitter Inverted Data Input.	
3	Tx2+	Transmitter Non-Inverted Data Input.	
4	GND	Transmitter Ground (Common with Receiver Ground).	1
5	Tx4-	Transmitter Inverted Data Input.	
6	Tx4+	Transmitter Non-Inverted Data Input.	
7	GND	Transmitter Ground (Common with Receiver Ground).	1
8	ModSelL	Module Select.	2
9	ResetL	Module Reset.	2
10	VccRx	+3.3V Receiver Power Supply.	
11	SCL	2-Wire Serial Interface Clock.	2
12	SDA	2-Wire Serial Interface Data.	2
13	GND	Transmitter Ground (Common with Receiver Ground).	1
14	Rx3+	Receiver Non-Inverted Data Output.	
15	Rx3-	Receiver Inverted Data Output.	
16	GND	Transmitter Ground (Common with Receiver Ground).	1
17	Rx1+	Receiver Non-Inverted Data Output.	
18	Rx1-	Receiver Inverted Data Output.	
19	GND	Transmitter Ground (Common with Receiver Ground).	1
20	GND	Transmitter Ground (Common with Receiver Ground).	1
21	Rx2-	Receiver Inverted Data Output.	
22	Rx2+	Receiver Non-Inverted Data Output.	
23	GND	Transmitter Ground (Common with Receiver Ground).	1
24	Rx4-	Receiver Inverted Data Output.	1
25	Rx4+	Receiver Non-Inverted Data Output.	
26	GND	Transmitter Ground (Common with Receiver Ground).	1
27	ModPrs1	Module Present.	
28	IntL	Interrupt.	2
29	VccTx	+3.3V Transmitter Power Supply.	
30	Vcc1	+3.3V Power Supply.	
31	LPMode	Low-Power Mode.	2
32	GND	Transmitter Ground (Common with Receiver Ground).	1
33	Tx3+	Transmitter Non-Inverted Data Input.	
34	Tx3-	Transmitter Inverted Data Input.	
35	GND	Transmitter Ground (Common with Receiver Ground).	1
36	Tx1+	Transmitter Non-Inverted Data Input.	
37	Tx1-	Transmitter Inverted Data Input.	
38	GND	Transmitter Ground (Common with Receiver Ground).	1

Notes:

1. The module signal grounds are isolated from the module case.
2. This is an open collector/drain output that, on the host board, requires a 4.7kΩ to 10kΩ pull-up resistor to the Host_Vcc.

Electrical Pin-Out Details (QSFP+ End)

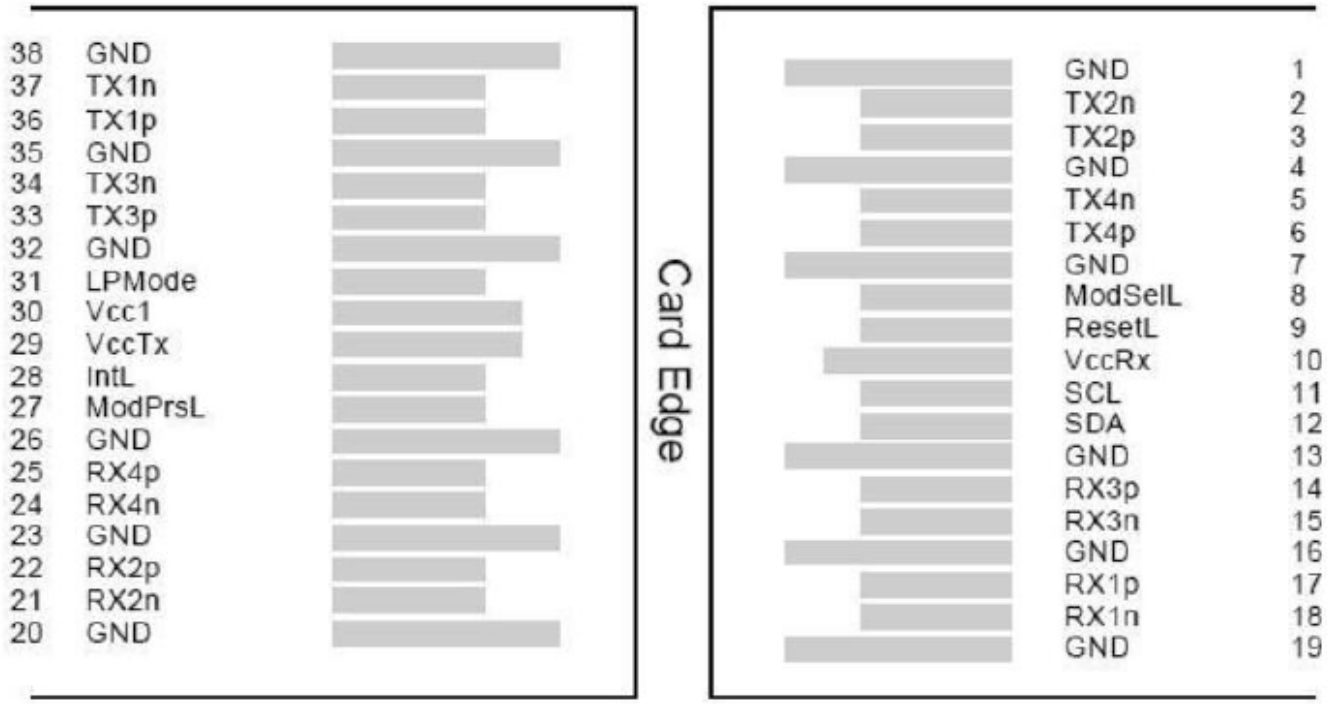

Pin Descriptions (SFP+ End)

Pin	Symbol	Name/Description	Notes
1	VeeT	Transmitter Ground.	1
2	Tx_Fault	Transmitter Fault. LVTTL-O. “High” indicates a fault condition.	2
3	Tx_Disable	Transmitter Disable. LVTTL-I. “High” or “open” disables the transmitter.	3
4	SDA	2-Wire Serial Interface Data. LVCMOS-I/O. MOD_DEF2.	4
5	SCL	2-Wire Serial Interface Clock. LVCMOS-I/O. MOD_DEF1.	4
6	MOD_ABS	Module Absent. Output. Connected to the VeeT or VeeR in the module.	5
7	RS0	Rate Select 0. Not used. Presents high input impedance.	
8	Rx_LOS	Receiver Loss of Signal. LVTTL-O.	2
9	RS1	Rate Select 1. Not used. Presents high input impedance.	
10	VeeR	Receiver Ground.	1
11	VeeR	Receiver Ground.	1
12	RD-	Inverse Received Data Out. CML-O.	
13	RD+	Receiver Data Out. CML-O.	
14	VeeR	Receiver Ground.	
15	VccR	+3.3V Receiver Power.	
16	VccT	+3.3V Transmitter Power.	
17	VeeT	Transmitter Ground.	1
18	TD+	Transmitter Data In. CML-I.	
19	TD-	Inverse Transmitter Data In. CML-I.	
20	VeeT	Transmitter Ground.	1

Notes:

1. The module signal grounds are isolated from the module case.
2. This is an open collector/drain output that, on the host board, requires a 4.7kΩ to 10kΩ pull-up resistor to the Host_Vcc.
3. This input is internally biased high with a 4.7kΩ to 10kΩ pull-up resistor to the VccT.
4. 2-wire serial interface clock and data lines require an external pull-up resistor dependent on the capacitance load.
5. This is a ground return that, on the host board, requires a 4.7kΩ to 10kΩ pull-up resistor to the Host_Vcc.

Electrical Pin-Out Details (SFP+ End)

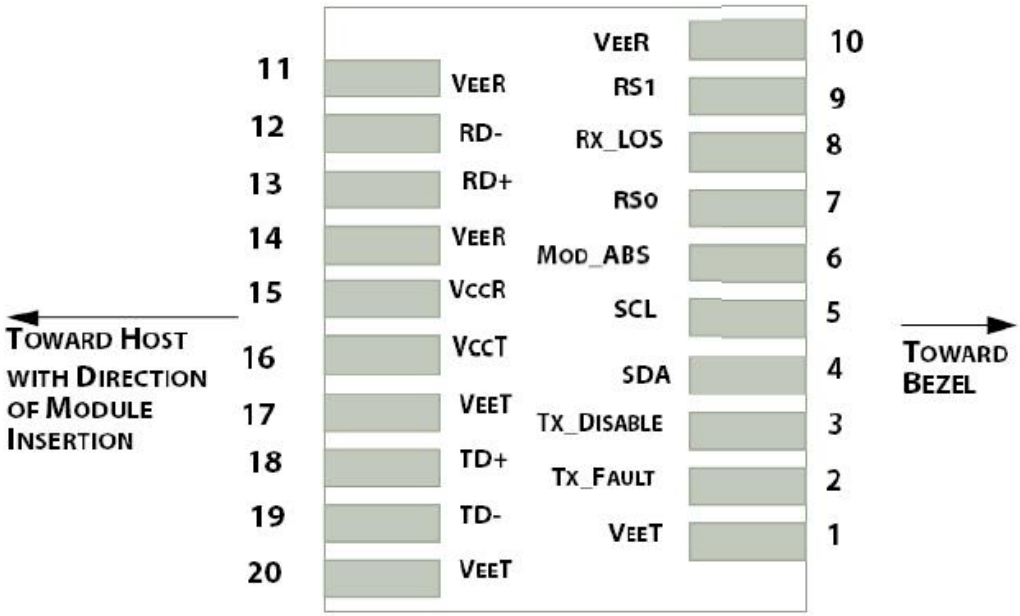

Application Interface Circuit

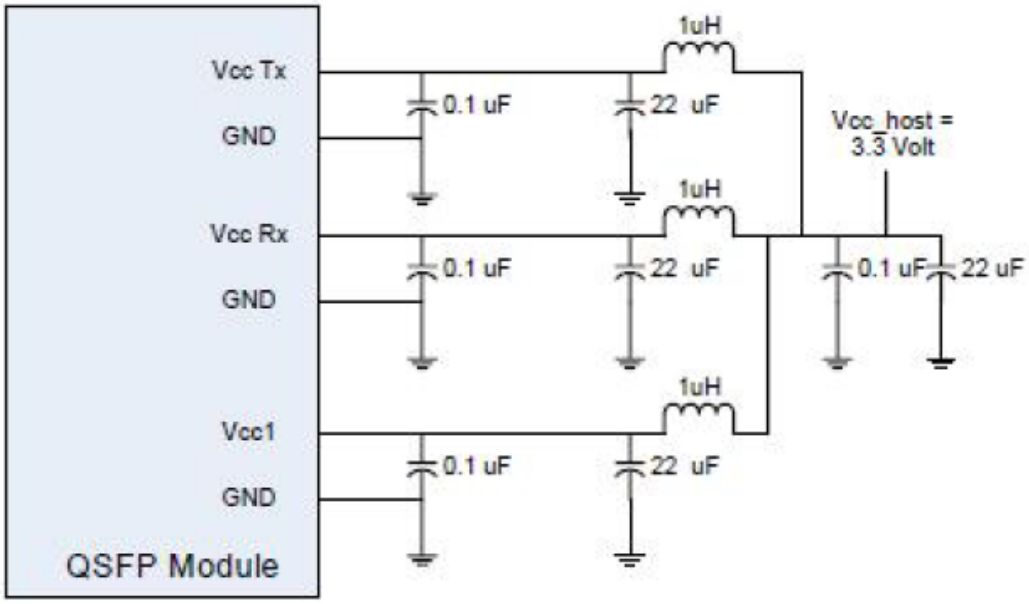

Active Optical Cable Specifications

Parameter	Symbol	Min.	Typ.	Max.	Unit
AOC Cable Length (L1 ≤ 5m)	L1	L – 0.06	L	L + 0.06	M
AOC Cable Length (L1 > 5m)	L1	L*95%	L	L*105%	M
AOC Cable Length of Branch (L2 ≤ 3m)	L2	L – 0.06	L	L + 0.06	M
Module Retention		90		170	N
Module Insertion		0		18	N
Module Extraction		0		25	N
Cable Pull Strength - Apply Load at 0˚		25			N
Cable Pull Strength - Apply Load at 90˚		20			N
Cable Bending Radius		30			mm
Insertion/Removal Cycles		50			cycles

Mechanical Specifications

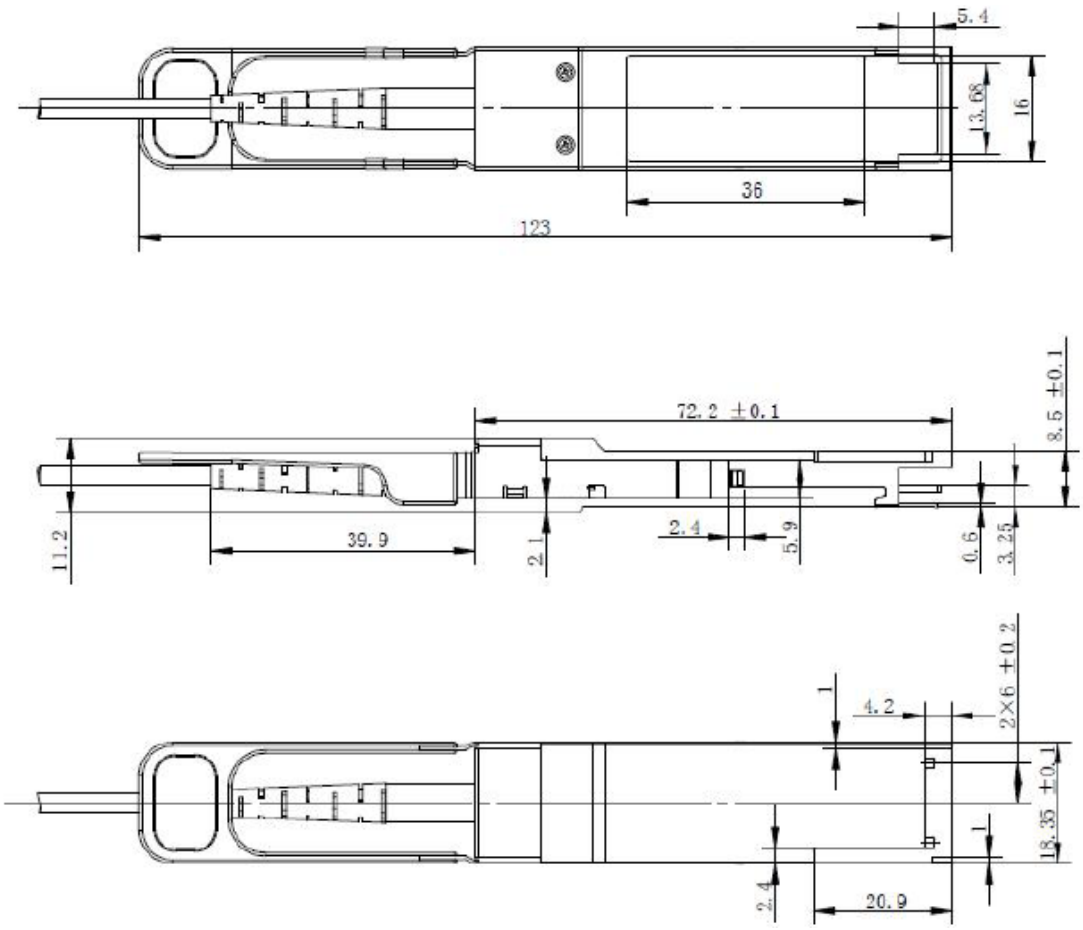

QSFP+ End

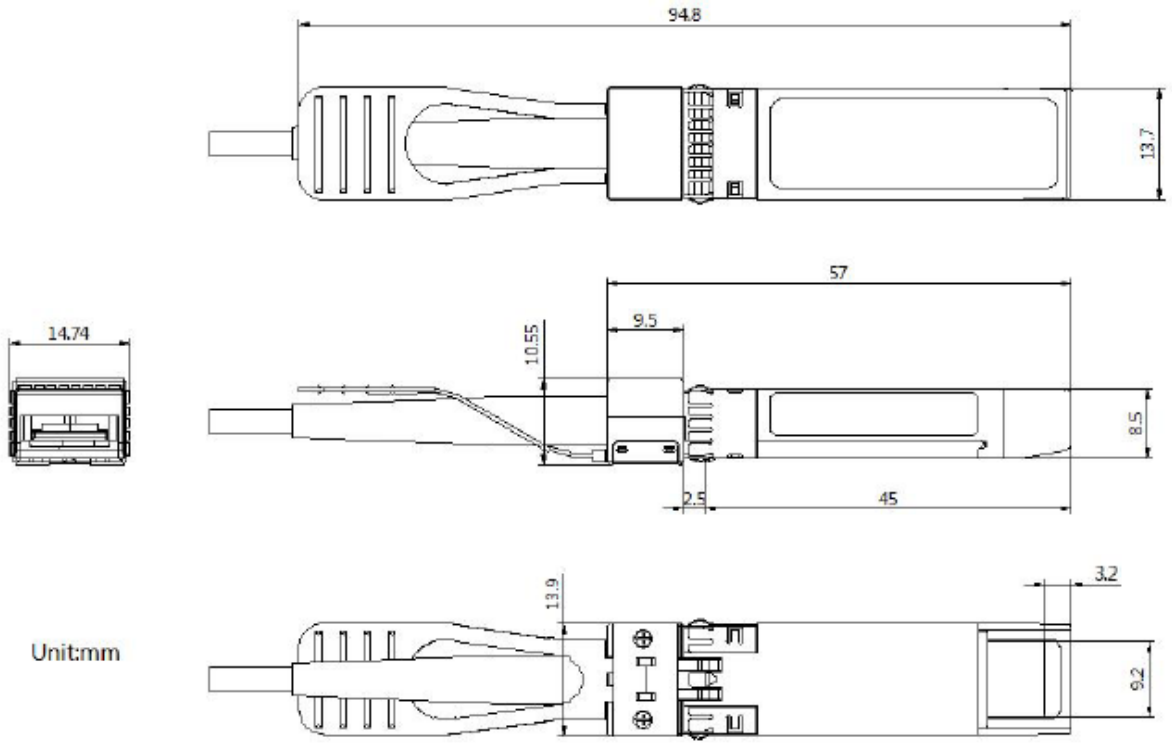

SFP+ End

About Skylane Optics

Skylane is a leading provider of transceivers for optical communication.

We offer an extensive portfolio for the enterprise, access, datacenter and metropolitan fiber optical market as well as for smart home applications and home networks.

We cover the European, South American and North American market with a strong partner network and have offices in Belgium, Brazil, Sweden and USA.

Our offerings are characterized by high quality and performance. In combination with our strong technical support, we enable our customers to build cost optimized network solutions.

We offer an extensive range of high-quality products including transceivers (Optical and copper), Active Optical Cable (AOC), Direct Attach Cable (DAC), Mux/Demux, Coding Box.