SKY-Q28CIQ28CN2-O1M

Cisco® QSFP-100G-AOC1M to Ciena® Compatible 100GBase-AOC QSFP28 to QSFP28 Active Optical Cable (850nm, MMF, 1m)

Product Description

This Cisco® QSFP-100G-AOC1M to Ciena® dual OEM compatible 100GBase-AOC QSFP28 to QSFP28 active optical cable has a maximum reach of 1.0m (3.3ft). It is 100% Cisco® to Ciena® compatible and has been programmed, uniquely serialized, data-traffic and application tested to ensure that it is compliant and functional. This active optical cable will initialize and perform identically to Cisco® to Ciena®'s individual cables and is built to meet or exceed Cisco® to Ciena®'s specifications. This product complies with MSA (Multi-Source Agreement) standards. We stand behind the quality of our products and proudly offer a limited lifetime warranty.

Skylane's transceivers are RoHS compliant and lead-free.

Features:

- QSFP28 MSA compliant
- Supports 103.1Gbps aggregate bit rate
- Four independent full-duplex channels
- 4x25G electrical interface (OIF CEI-28G-VSR)
- Single 3.3V power supply
- Operating case temperature: 0 to 70 Celsius
- RoHS Compliant and Lead Free
- Maximum power consumption 2.5W each terminal

Applications:

- 100GBase Ethernet
- InfiniBand EDR

For your product safety, please read the following information carefully before any manipulation of the transceiver:

ESD

This transceiver is specified as ESD threshold 1kV for SFI pins and 2kV for all others electrical input pins, tested per MIL-STD-883G, Method 3015.4 /JESD22-A114-A (HBM). However, normal ESD precautions are still required during the handling of this module.

LASER SAFETY

This is a Class1 Laser Product according to IEC 60825-1:2007. This product complies with 21 CFR 1040.10 and 1040.11 except for deviations pursuant to Laser Notice No. 50, dated (June 24, 2007).

The optical ports of the module need to be terminated with an optical connector or with a dust plug in order to avoid contamination.

General Specifications

Parameter	Symbol	Min.	Typ.	Max.	Unit
Storage Temperature	Tstg	-40		85	˚C
Operating Case Temperature	Tc	0		70	
Power Supply Voltage	Vcc	-0.5		3.6	V
Relative Humidity (Non-Condensing)	RH	0		85	%

Electrical Characteristics

Parameter	Test Point	Min.	Typ.	Max.	Unit	Notes
Power Consumption				2.5	W	1
Supply Current	Icc			757	mA	1
Power Supply Voltage	Vcc	3.135	3.3	3.465	V	
Data Rate Per Lane			25.78125		Gbps	
Data Rate Accuracy		-100		100	ppm	
Control Input Voltage - High		2		Vcc	V	
Control Input Voltage - Low		0		0.8	V	
Transmitter (Per Lane)						
Overload Differential Voltage	TP1a	900			mV	
Common-Mode Voltage (Vcm)	TP1	-350		2825	mV	2
Differential Termination Resistance Mismatch	TP1			10	%	At 1MHz
Differential Return Loss (SDD11)	TP1			See CEI-28G0VSR Equation 13-19	dB	
Common-Mode to Differential Conversion and Differential to Common-Mode Conversion	TP1			See CEI-28G-VSR Equation 13-20	dB	
Stressed Input Test	TP1a	See CEI-28G-VSR Section 13.3.11.2.1				
Receiver (Per Lane)						
Differential Voltage (Pk-Pk)	TP4			900	mV	
Common-Mode Voltage (Vcm)	TP4	-350		2850	mV	2
Common-Mode Noise (RMS)	TP4			17.5	mV	
Differential Termination Resistance Mismatch	TP4			10	%	At 1MHz

Differential Return Loss (SDD22)	TP4			See CEI-28G-VSR Equation 13-19	dB	
Common-Mode to Differential Conversion and Differential to Common-Mode Conversion (SCC22)	TP4			-2	dB	3
Transition Time (20-80%)	TP4	9.5			ps	
Vertical Eye Closure (VEC)	TP4			5.5	dB	
Eye Width at 10^{-15} Probability (EW15)	TP4	0.57			UI	
Eye Height at 10^{-15} Probability (EH15)	TP4	0.57			UI	

Notes:

1. Per terminal.
2. Vcm is generated by the host. Specification includes the effects of ground offset voltage.
3. From 250MHz to 30GHz.

Pin Descriptions

Pin	Logic	Symbol	Name/Description	Notes
1		GND	Module Ground.	1
2	CML-I	Tx2-	Transmitter Inverted Data Input.	
3	CML-I	Tx2+	Transmitter Non-Inverted Data Input.	
4		GND	Module Ground.	1
5	CML-I	Tx4-	Transmitter Inverted Data Input.	
6	CML-I	Tx4+	Transmitter Non-Inverted Data Input.	
7		GND	Module Ground.	1
8	LVTTL-I	ModSelL	Module Select.	2
9	LVTTL-I	ResetL	Module Reset.	2
10		VccRx	+3.3V Receiver Power Supply.	
11	LVCMOS-I	SCL	2-Wire Serial Interface Clock.	2
12	LVCMOS-I/O	SDA	2-Wire Serial Interface Data.	2
13		GND	Module Ground.	1
14	CML-O	Rx3+	Receiver Non-Inverted Data Output.	
15	CML-O	Rx3-	Receiver Inverted Data Output.	
16		GND	Module Ground.	1
17	CML-O	Rx1+	Receiver Non-Inverted Data Output.	
18	CML-O	Rx1-	Receiver Inverted Data Output.	
19		GND	Module Ground.	1
20		GND	Module Ground.	1

21	CML-O	Rx2-	Receiver Inverted Data Output.	
22	CML-O	Rx2+	Receiver Non-Inverted Data Output.	
23		GND	Module Ground.	1
24	CML-O	Rx4-	Receiver Inverted Data Output.	
25	CML-O	Rx4+	Receiver Non-Inverted Data Output.	
26		GND	Module Ground.	1
27	LVTTL-O	ModPrsL	Module Present. Internally pulled down to the GND.	
28	LVTTL-O	IntL	Interrupt output should be pulled up on the host board.	2
29		VccTx	+3.3V Transmitter Power Supply.	
30		Vcc1	+3.3V Power Supply.	
31	LVTTL-I	LPMode	Low-Power Mode.	2
32		GND	Module Ground.	1
33	CML-I	Tx3+	Transmitter Non-Inverted Data Input.	
34	CML-I	Tx3-	Transmitter Inverted Data Input.	
35		GND	Module Ground.	1
36	CML-I	Tx1+	Transmitter Non-Inverted Data Input.	
37	CML-I	Tx1-	Transmitter Inverted Data Input.	
38		GND	Module Ground.	1

Notes:

1. The module circuit ground is isolated from the module chassis ground within the module.
2. Open collector. Should be pulled up with 4.7kΩ to 10kΩ on the host board to a voltage between 3.15V and 3.6V.

Electrical Pin-Out Details

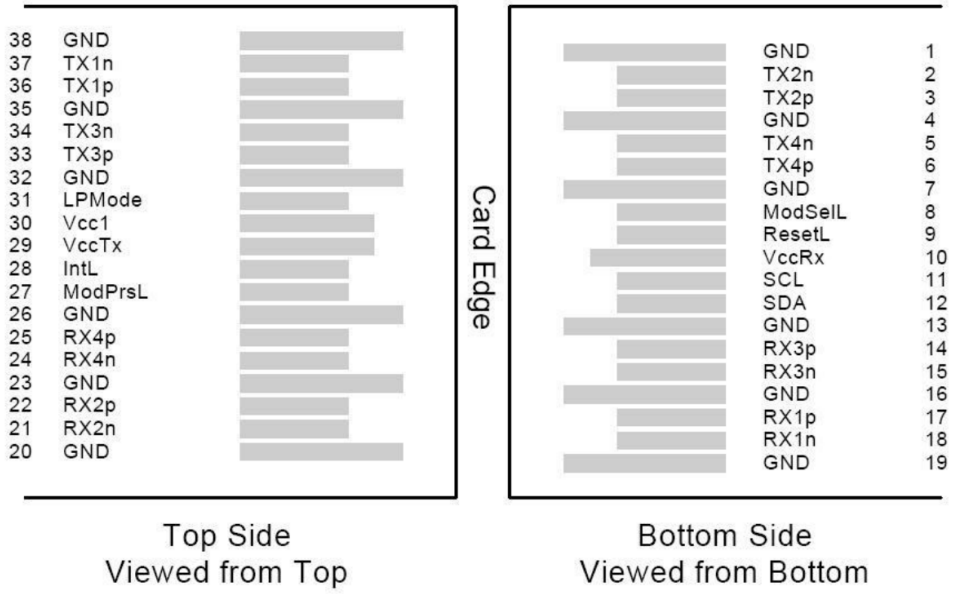

Recommended Power Supply Filter

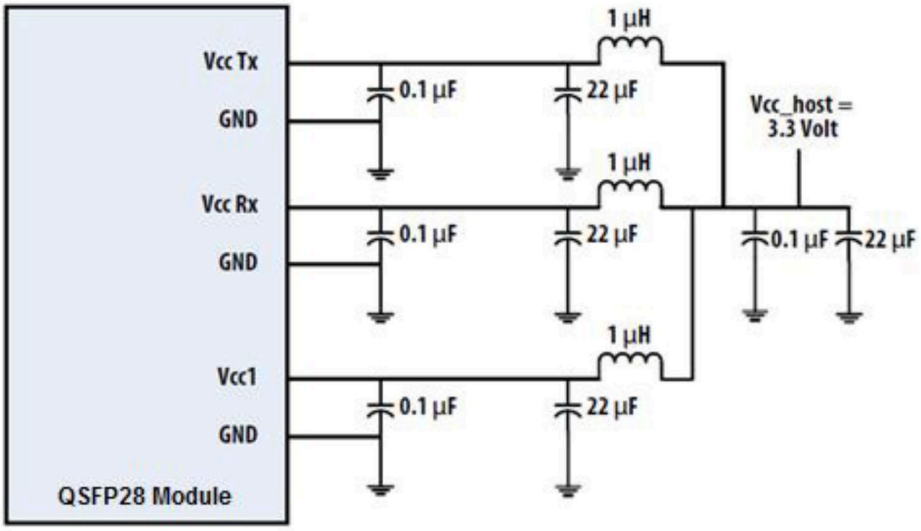

Block Diagram

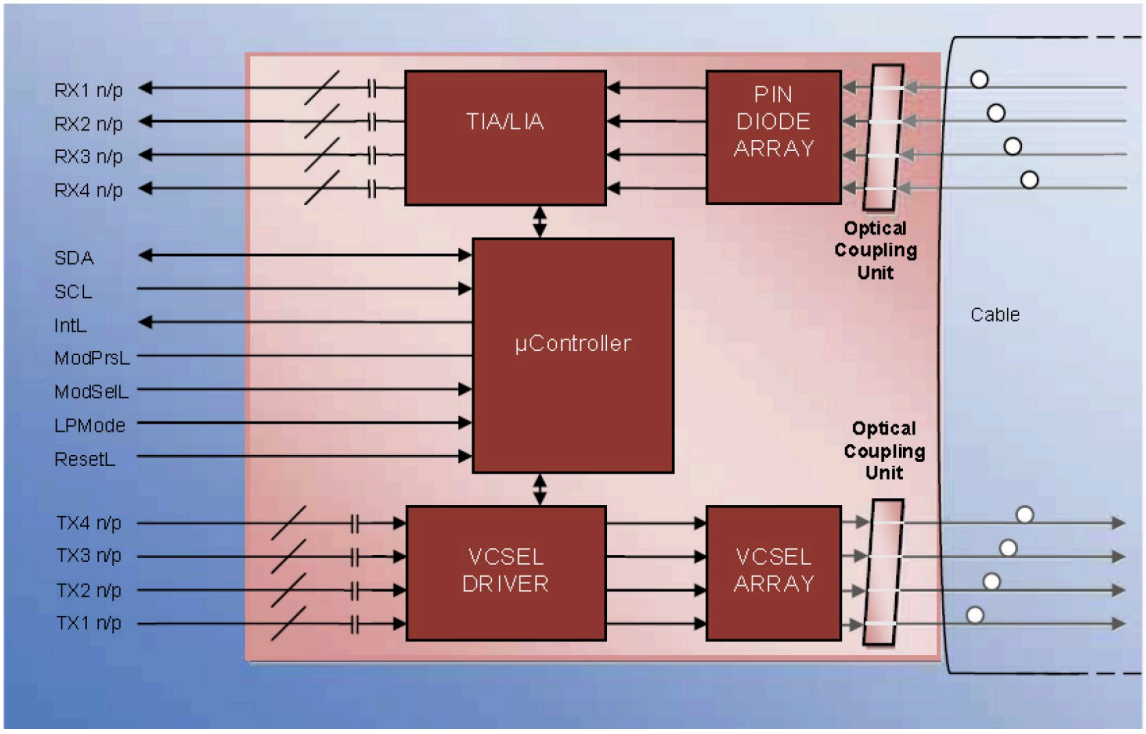

Mechanical Specifications

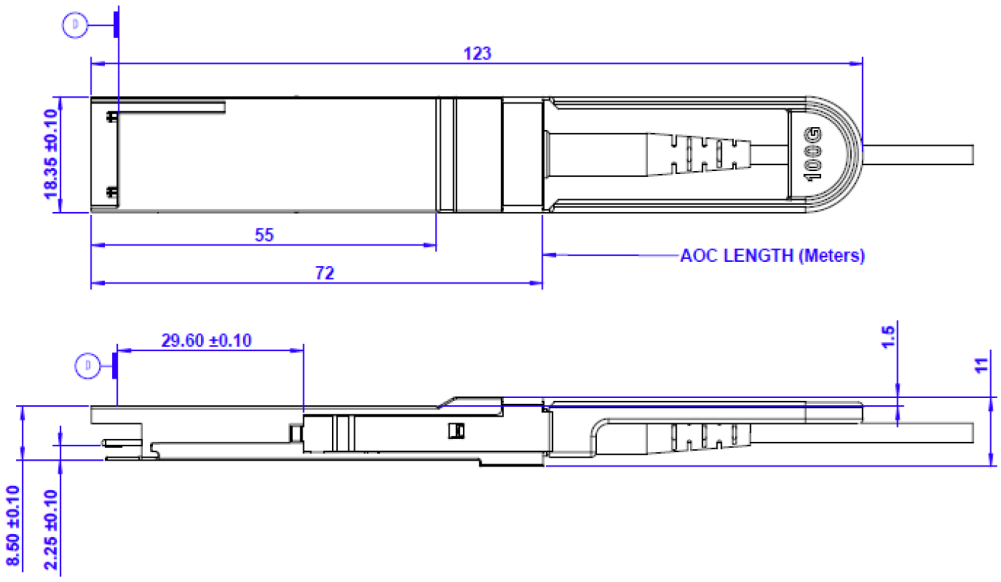

About Skylane Optics

Skylane is a leading provider of transceivers for optical communication.

We offer an extensive portfolio for the enterprise, access, datacenter and metropolitan fiber optical market as well as for smart home applications and home networks.

We cover the European, South American and North American market with a strong partner network and have offices in Belgium, Brazil, Sweden and USA.

Our offerings are characterized by high quality and performance. In combination with our strong technical support, we enable our customers to build cost optimized network solutions.

We offer an extensive range of high-quality products including transceivers (Optical and copper), Active Optical Cable (AOC), Direct Attach Cable (DAC), Mux/Demux, Coding Box.