SFP13020PA2D94O

Hirschmann® M-SFP-2.5-SM/LC EEC Compatible OC-48-IR SFP Transceiver (SMF, 1310nm, 10km, LC, DOM, -40 to 85C)

Product Description

This Hirschmann® M-SFP-2.5-SM/LC EEC compatible SFP transceiver provides OC-48 (2670mbs) transmission rates for up to 10km over single-mode fiber (SMF) using a wavelength of 1310nm via an LC connector. It can operate at temperatures between -40 and 85C. It is guaranteed to be 100% compatible with the equivalent Hirschmann® transceiver. This easy to install, hot swappable transceiver has been programmed, uniquely serialized and data-traffic and application tested to ensure that it will initialize and perform identically. Digital optical monitoring (DOM) support is also present to allow access to real-time operating parameters. We stand behind the quality of our products and proudly offer a limited lifetime warranty.

Skylane's transceivers are RoHS compliant and lead-free.

Features:

- INF-8074 and SFF-8472 Compliance
- Duplex LC Connector
- Industrial Temperature -40 to 85 Celsius
- Single-mode Fiber
- Hot Pluggable
- Excellent ESD Protection
- Metal with Lower EMI
- RoHS Compliant and Lead Free

Applications:

- OC-48 Transmission
- Access and Enterprise

For your product safety, please read the following information carefully before any manipulation of the transceiver:

ESD

This transceiver is specified as ESD threshold 1kV for SFI pins and 2kV for all others electrical input pins, tested per MIL-STD-883G, Method 3015.4 /JESD22-A114-A (HBM). However, normal ESD precautions are still required during the handling of this module.

LASER SAFETY

This is a Class1 Laser Product according to IEC 60825-1:2007. This product complies with 21 CFR 1040.10 and 1040.11 except for deviations pursuant to Laser Notice No. 50, dated (June 24, 2007).

The optical ports of the module need to be terminated with an optical connector or with a dust plug in order to avoid contamination.

Absolute Maximum Ratings

Parameter	Symbol	Min.	Typ.	Max.	Unit	Notes
Maximum Supply Voltage	Vcc	-0.5		4.0	V	
Storage Temperature	Tstg	-40		85	°C	
Operating Case Temperature	Tc	-40	25	85	°C	
Relative Humidity	RH	5		95	%	
Data Rate			2.488		Gbps	
Power Supply Current	Icc			300	mA	

Electrical Characteristics

Parameter		Symbol	Min.	Typ.	Max.	Unit	Notes
Supply Voltage		Vcc	3.15	3.3	3.45	V	
Data Rate				2.488		Gbps	
9µm Core Diameter SMF		L		15		km	
Transmitter							
LVPECL Inputs (Differential)		Vin	400		1600	mVp-p	1
Input Differential Impedance		Zin	85	100	115	Ω	2
Tx_Dis	**Disable**		2		Vcc+0.3	V	
	Enable		0		0.8	V	
Tx_Fault	**Fault**		2		Vcc+0.3	V	
	Normal		0		0.5	V	
Receiver							
LVPECL Outputs (Differential)		Vout	400	800	1200	mVp-p	3
Output Differential Impedance		Zout	85	100	115	Ω	
Tx_Disable Assert Time		Toff			10	us	
Rx_LOS	**Loss of Signal (LOS)**		2		Vcc+0.3	V	
	Normal Operation		0		0.8	V	
Mod_Def(0.2)		Voh	2.5			V	4
		Vol	0		0.5	V	

Notes:

1. AC Coupled inputs. LVPECL logic. Internally AC coupling.
2. RIN> 100kΩ @ DC.
3. AC Coupled outputs. LVPECL logic. Internally AC coupling.
4. With Serial ID.

Optical Characteristics

Parameter	Symbol	Min.	Typ.	Max.	Unit	Notes
Transmitter						
Center Wavelength	λc	1260	1310	1360	nm	
Spectral Width (-20dB)	Δλ			1	nm	
Side Mode Suppression Ratio	SMSR	30			dB	
Average Output Power	POUT	-5		0	dBm	1
Extinction Ratio	ER	8.2			dB	2
Rise/Fall Time (20%-80%)	Tr/Tf			150	ps	
Total Jitter		TJ		0.07	UI	2
POUT@Tx Disable Asserted	POUT			-45	dBm	
Output Optical Eye	ITU-T G.957 Compliant					
Receiver						
Center Wavelength	λc	1260		1600	nm	
Receiver Sensitivity	Pmin			-18	dBm	3
Receiver Overload	Pmax	-3			dBm	
LOS De-Assert	LOSD			-19	dBm	
LOS Assert	LOSA	-35			dBm	
LOS Hysteresis		0.5			dB	

Notes:

1. Output power is measured by coupling into a 9/125mm single-mode fiber.
2. Filtered. Measured with a PRBS 2^{23}-1 test pattern @2500Mbps.
3. Minimum average optical power is measured at BER less than $1E^{-12}$ with 2^{23}-1 PRBS and ER-9dB.

Pin Descriptions

Pin	Symbol	Name/Descriptions	Plug Seq.	Ref.
1	VeeT	Transmitter Ground.	1	5
2	Tx_Fault	Transmitter Fault Indication.	3	1
3	Tx_Disable	Transmitter Disable. Module disables on “high” or “open.”	3	2
4	MOD-DEF2	Module Definition 2. 2-Wire Serial ID Interface.	3	3
5	MOD-DEF1	Module Definition 1. 2-Wire Serial ID Interface.	3	3
6	MOD-DEF0	Module Definition 0. 2-Wire Serial ID Interface.	3	3
7	Rate Select	Not Connected.	3	Function not available
8	LOS	Loss of Signal.	3	4
9	VeeR	Receiver Ground.	1	5
10	VeeR	Receiver Ground.	1	5
11	VeeR	Receiver Ground.	1	5
12	RD-	Inverse Received Data out.	3	6
13	RD+	Received Data out.	3	7
14	VeeR	Receiver Ground.	1	5
15	VccR	3.3 ± 5% Receiver Power.	2	7
16	VccT	3.3 ± 5% Transmitter Power.	2	7
17	VeeT	Transmitter Ground.	1	5
18	TD+	Transmitter Data In.	3	8
19	TD-	Inverse Transmitter Data In.	3	8
20	VeeT	Transmitter Ground.	1	5

Notes:

1. TX Fault is an open collector/drain output, which should be pulled up with a 4.7kΩ–10kΩ resistor on the host board. Pull up voltage between 2.0V and VccT/ R+0.3V. When “high,” output indicates a laser fault of some kind. “Low” indicates normal operation. In the low state, the output will be pulled to < 0.8V.

2. Tx_Disable is an input that is used to shut down the transmitter optical output. It is pulled up within the module with a 4.7kΩ–10kΩ resistor. Its states are:

   Low (0 – 0.8V): Transmitter On (>0.8, < 2.0V): Undefined.

   High (2.0 – 3.465V): Transmitter Disabled Open: Transmitter Disabled.

3. MOD-DEF0,1,2. These are the module definition pins. They should be pulled up with a 4.7kΩ–10kΩ resistor on the host board. The pull-up voltage shall be VccT or VccR.

   MOD-DEF 0 is grounded by the module to indicate that the module is present.

   MOD-DEF 1 is the clock line of 2-wire serial interface for serial ID.

   MOD-DEF 2 is the data line of 2-wire serial interface for serial ID.

4. LOS (Loss of Signal) is an open collector/drain output, which should be pulled up with a 4.7kΩ–10kΩ

resistor. Pull up voltage between 2.0V and VccT/R+0.3V. When “high,” this output indicates the received optical power is below the worst-case receiver sensitivity (as defined by the standard in use). “Low” indicates normal operation. In the “low” state, the output will be pulled to <0.8V.

5. VeeR and VeeT may be internally connected within the SFP module.
6. RD-/+: these are the differential receiver outputs. They are AC coupled 100 (differential) lines which should be terminated with 100 (differential) at the user SERDES. The AC coupling is done inside the module and is thus not required on the host board. The voltage swing on these lines will be between 400mV and 2000mV differential (200mV –1000mV single ended) when properly terminated.
7. VccR and VccT are the receiver and transmitter power supplies. They are defined as 3.3V±5% at the SFP connector pin. Maximum supply current is 300mA. Recommended host board power supply filtering is shown below. Inductors with DC resistance of less than 1Ω should be used in order to maintain the required voltage at the SFP input pin with 3.3V supply voltage. When the recommended supply-filtering network is used, hot-plugging of the SFP transceiver module will result in an in rush current of no more than 30mA greater than the steady state value. VccR and VccT may be internally connected within the SFP transceiver module.
8. TD-/+: these are the differential transmitter inputs. They are AC-coupled, differential lines with 100 differential terminations inside the module. The AC coupling is done inside the module and is thus not required on the host board. The inputs will accept differential swings of 400mV - 2000mV (200mV – 1000mV single-ended).

Electrical Pin-out Details

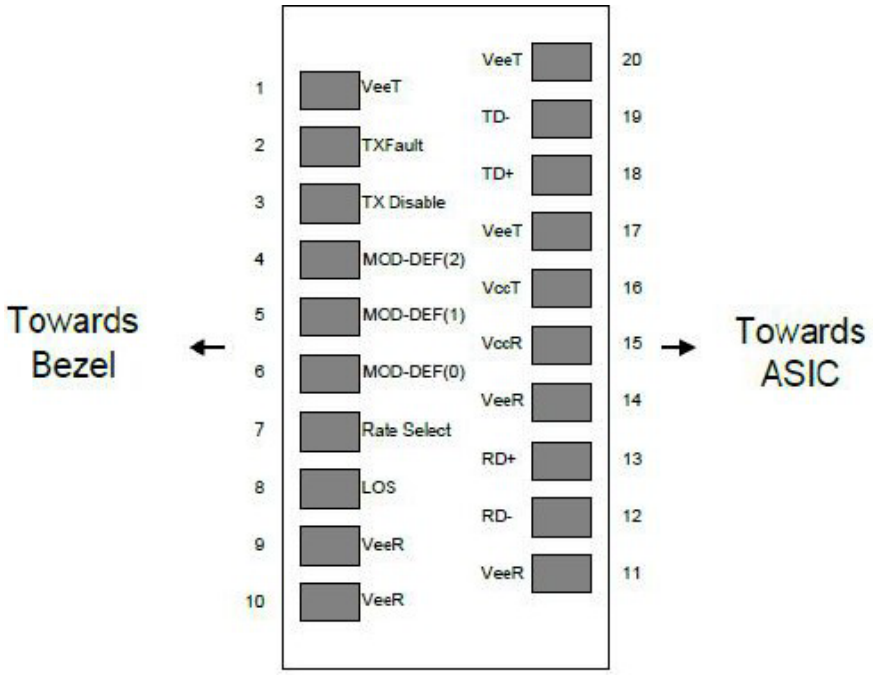

Recommended Application Interface Block Diagram

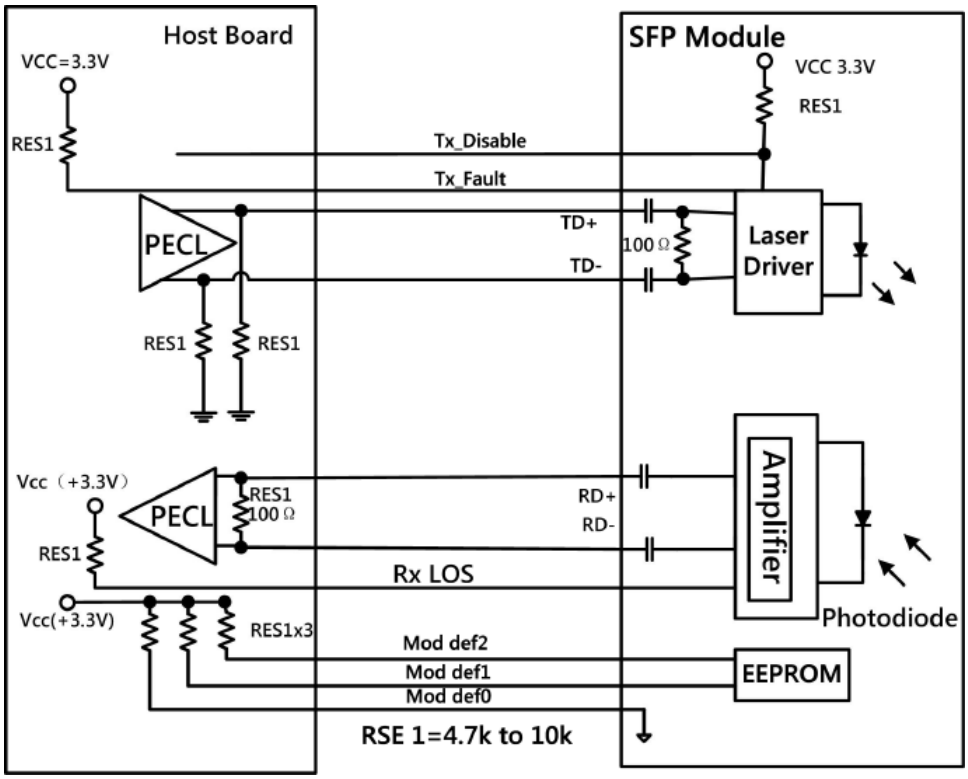

Mechanical Specifications

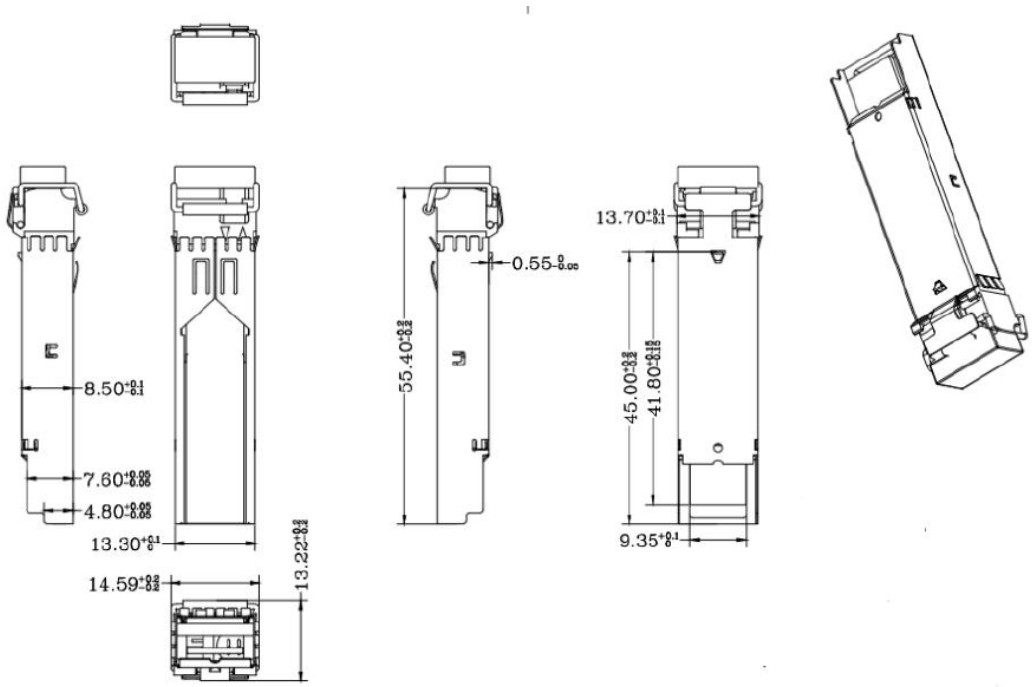

About Skylane Optics

Skylane is a leading provider of transceivers for optical communication.

We offer an extensive portfolio for the enterprise, access, datacenter and metropolitan fiber optical market as well as for smart home applications and home networks.

We cover the European, South American and North American market with a strong partner network and have offices in Belgium, Brazil, Sweden and USA.

Our offerings are characterized by high quality and performance. In combination with our strong technical support, we enable our customers to build cost optimized network solutions.

We offer an extensive range of high-quality products including transceivers (Optical and copper), Active Optical Cable (AOC), Direct Attach Cable (DAC), Mux/Demux, Coding Box.