SFP-H10GB-ACU15M-SKY

Cisco® SFP-H10GB-ACU15M Compatible 10GBase-CU SFP+ Direct Attach Cable (Active Twinax, 15m)

Product Description

This is a Cisco® SFP-H10GB-ACU15M compatible 10GBase-CU SFP+ to SFP+ direct attach cable that operates over active copper with a maximum reach of 15.0m (49.2ft). It has been programmed, uniquely serialized, and data-traffic and application tested to ensure it is 100% compliant and functional. This direct attach cable is built to comply with MSA (Multi-Source Agreement) standards. We stand behind the quality of our products and proudly offer a limited lifetime warranty.

Skylane's transceivers are RoHS compliant and lead-free.

Features:

- Up to 10Gbps bi-directional data links
- Industry Standard small form pluggable
- Dual SFP Connectors
- Single Power Supply 3.3V
- Operating Temperature: 0 to 70 Celsius
- Hot Pluggable
- RoHS Compliant and Lead-Free

Applications:

- 10G Ethernet
- 10G Fibre Channel

For your product safety, please read the following information carefully before any manipulation of the transceiver:

ESD

This transceiver is specified as ESD threshold 1kV for SFI pins and 2kV for all others electrical input pins, tested per MIL-STD-883G, Method 3015.4 /JESD22-A114-A (HBM). However, normal ESD precautions are still required during the handling of this module.

LASER SAFETY

This is a Class1 Laser Product according to IEC 60825-1:2007. This product complies with 21 CFR 1040.10 and 1040.11 except for deviations pursuant to Laser Notice No. 50, dated (June 24, 2007).

The optical ports of the module need to be terminated with an optical connector or with a dust plug in order to avoid contamination.

General Specifications

Parameter	Symbol	Min	Typ.	Max.	Unit	Notes
Data Rate	DR		10.3125		Gbps	1
Bit Error Rate	BER			10^{-12}		
Operating Case Temperature	Tc	0		70	°C	2
Storage Temperature	Tstg	-40		85	°C	3
Input Voltage	Vcc	3.14	3.3	3.46	V	4
Supply Current	Icc		100	300	mA	4
Cable Impedance	Z	90	100	110	Ω	
Product Weight	GD		96		g/PCS	
Cable Weight	GC		50		G/M	
Dust Cap Weight	GS		0.80		g/PCS	
Wire Gauge			24		AWG	
Tolerance Range			8		±cm	

Notes:

1. IEEE 802.3ae compatible.
2. Case temperature.
3. Ambient temperature.
4. For electrical power interface.

Pin Descriptions

Pin	Symbol	Name/Description	Notes
1	VeeT	Transmitter ground. Common with receiver ground.	1
2	Tx_Fault	Transmitter Fault.	
3	Tx_Disable	Transmitter Disable. Laser output disabled on “high” or “open.”	2
4	SDA	Data line for Serial ID.	3
5	SCL	Clock line for Serial ID.	3
6	MOD_ABS	Module absent. Grounded within the module.	3
7	RS0	No connection required.	
8	LOS	Loss of Signal. Logic 0 indicated normal operation.	4
9	RS1	No connection required.	
10	VeeR	Receiver ground. Common with transmitter ground.	1
11	VeeR	Receiver ground. Common with transmitter ground.	1
12	RD-	Receiver Inverted DATA out. AC coupled.	
13	RD+	Receiver Non0inverted DATA out. AC coupled.	
14	VeeR	Receiver ground. Common with transmitter ground.	1
15	VccR	Receiver power supply.	
16	VccT	Transmitter power supply.	
17	VeeT	Transmitter ground. Common with receiver ground.	1
18	TD+	Transmitter Non-Inverted DATA in. AC coupled.	
19	TD-	Transmitter Inverted DATA in. AC coupled.	
20	VeeT	Transmitter ground. Common with receiver ground.	1

Notes:

1. Circuit ground is isolated from chassis ground.
2. Disabled: Tdis>2V or open, Enabled Tdis<0.8V.
3. Should be pulled up with 4.7kΩ-10kΩ on host board to a voltage between 2V and 3.6V.
4. LOS is open collector output.

Electrical Pad Layout

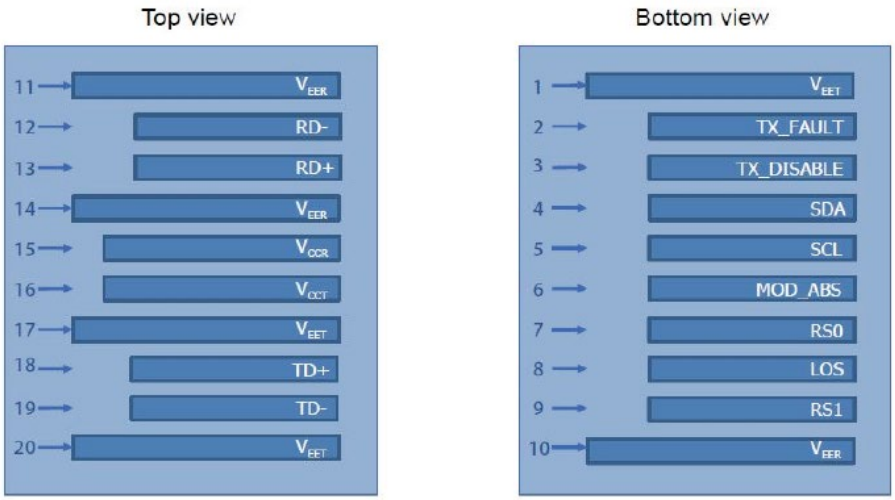

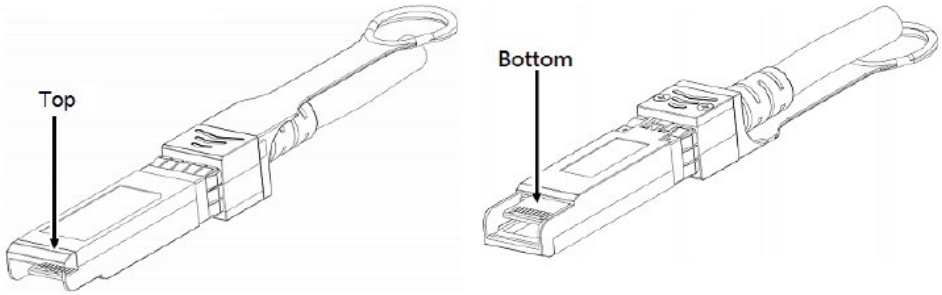

Block Diagram

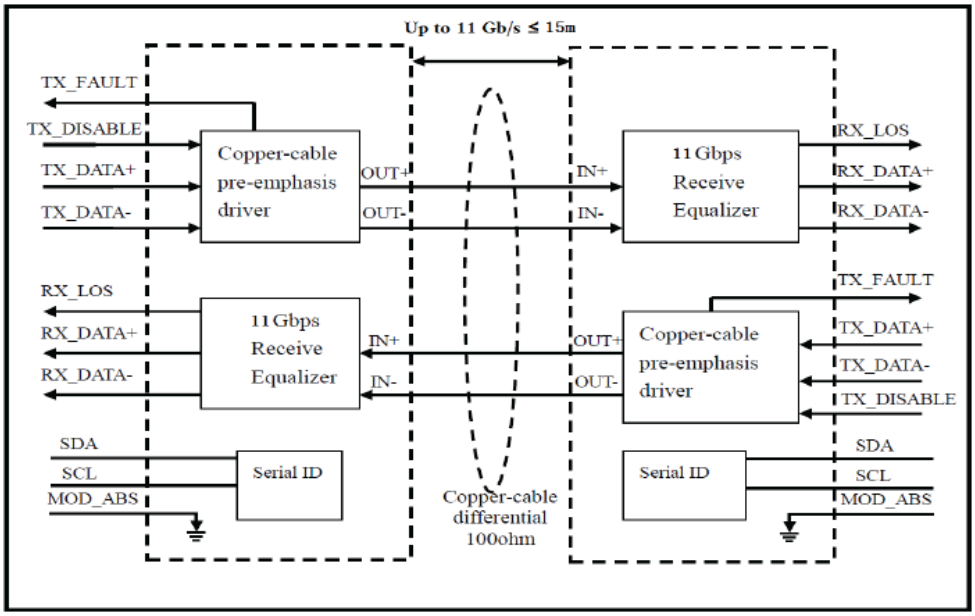

Mechanical Specifications

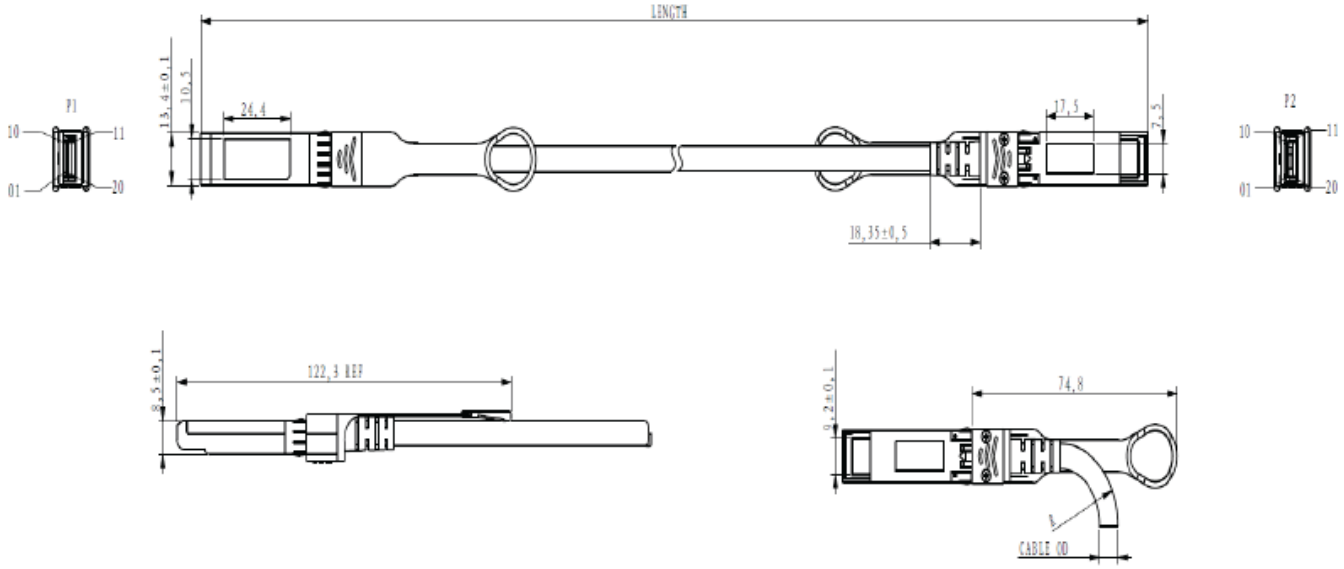

About Skylane Optics

Skylane is a leading provider of transceivers for optical communication.

We offer an extensive portfolio for the enterprise, access, datacenter and metropolitan fiber optical market as well as for smart home applications and home networks.

We cover the European, South American and North American market with a strong partner network and have offices in Belgium, Brazil, Sweden and USA.

Our offerings are characterized by high quality and performance. In combination with our strong technical support, we enable our customers to build cost optimized network solutions.

We offer an extensive range of high-quality products including transceivers (Optical and copper), Active Optical Cable (AOC), Direct Attach Cable (DAC), Mux/Demux, Coding Box.