SFP-4GB-CW-47-40-I-SKY

MSA Compliant 4GB Fibre Channel CWDM SFP Transceiver (SMF, 1470nm, 40km, LC, DOM, -40 to 85C)

Product Description

This MSA compliant SFP transceiver provides 4GBase-CWDM throughput up to 40km over single-mode fiber (SMF) using a wavelength of 1470nm via an LC connector. It is capable of withstanding -40 to 85C environments and can operate at temperatures between -40 and 85C. The listed reach has been determined using a link budget calculation and tested in a standard environment. Actual link distances achieved will be dependent upon the deployed environment. All of our transceivers are built to comply with Multi-Source Agreement (MSA) standards and are uniquely serialized and tested for data-traffic and application to ensure seamless network integration. Additional product features include Digital Optical Monitoring (DOM) support which allows access to real-time operating parameters. We stand behind the quality of our products and proudly offer a limited lifetime warranty.

Skylane's transceivers are RoHS compliant and lead-free.

Features:

- SFP MSA Compliant
- Operating Data Rate Up to 4.25Gbps
- Compliant with SFF-8472 Digital Diagnostic Monitor Interface
- Duplex LC Connector
- Hot-Pluggable
- Single 3.3V Power Supply
- Operating Temperature: -40 to 85 Celsius
- Laser Safety Compliant
- Excellent ESD Protection
- RoHS Compliant and Lead-Free
- RoHS Compliant and Lead Free

Applications:

- Ethernet over CWDM
- Access and Enterprise

For your product safety, please read the following information carefully before any manipulation of the transceiver:

ESD

This transceiver is specified as ESD threshold 1kV for SFI pins and 2kV for all others electrical input pins, tested per MIL-STD-883G, Method 3015.4 /JESD22-A114-A (HBM). However, normal ESD precautions are still required during the handling of this module.

LASER SAFETY

This is a Class1 Laser Product according to IEC 60825-1:2007. This product complies with 21 CFR 1040.10 and 1040.11 except for deviations pursuant to Laser Notice No. 50, dated (June 24, 2007).

The optical ports of the module need to be terminated with an optical connector or with a dust plug in order to avoid contamination.

CWDM Wavelengths

Wavelengths	Min.	Typ.	Max.
47	1464	1470	1477.5
49	1484	1490	1497.5
51	1504	1510	1517.5
53	1524	1530	1537.5
55	1544	1550	1557.5
57	1564	1570	1577.5
59	1584	1590	1597.5
61	1604	1610	1617.5

Absolute Maximum Ratings

Parameter		Symbol	Min.	Typ.	Max.	Unit	Notes
Data Rate	4FC			4.25		Gbps	
	2FC			2.125			
	FC			1.063			
Storage Temperature		Tstg	-40		85	℃	
Power Budget			18			dB	
Supply Voltage		Vcc	-0.5		3.6	V	
Operating Relative Humidity		RH			95	%	
Operating Case Temperature		Tc	-40		85	℃	

Electrical Characteristics

Parameter		Symbol	Min.	Typ.	Max.	Unit	Notes
Power Supply Voltage		Vcc	3.15	3.3	3.45	V	
Power Supply Current		Icc			300	mA	
Transmitter							
CML Inputs (Differential)		VIN	400		1600	mVp-p	1
Input Impedance (Differential)		ZIN	85	100	115	Ω	2
Tx_Disable	**Disable**		2		Vcc+0.3	V	
	Enable		0		0.8		
Tx_Fault	**Fault**		2		Vcc+0.3	V	
	Normal		0		0.8		
Receiver							
CML Outputs (Differential)		VOUT	400		1200	mVp-p	3
Output Impedance (Differential)		ZOUT	85	100	115	Ω	
Rx_LOS	**LOS**		2		Vcc+0.3	V	

	Normal		0		0.8		
MOD_DEF(0.2)		VOH	2.5			V	1
		VOL	0		0.5		

Notes:

1. AC coupled inputs. Output power is power coupled into a 9/125µm single-mode fiber.
2. RIN>100kΩ @ DC.
3. AC coupled outputs. Output power is power coupled into a 9/125µm single-mode fiber.
4. With serial ID.

Optical Characteristics

Parameter	Symbol	Min.	Typ.	Max.	Unit	Notes
Transmitter						
Center Wavelength	λC	λC–6	λC	λC+7.5	nm	
Spectral Width (-20dB)	Δλ			1	nm	
Side-Mode Suppression Ratio	SMSR	30			dB	
Average Output Power at 9/125µm SMF	POUT	0		5	dBm	1
Extinction Ratio @ 4.25Gbps	ER	4.5			dB	
Rise/Fall Time (Unfiltered, 20-80%)	Tr/Tf			120	ps	
Tx_Disable Assert Time	t_off			10	us	
POUT @ Tx_Disable Asserted	POUT			-45	dBm	2
Output Optical Eye	ANSI Fibre Channel and Gigabit Ethernet Compliant					3, 4
Receiver						
Center Wavelength	λC	1260		1620	nm	
Receiver Sensitivity	Pmin			-18	dBm	5
Receiver Overload	Pmax	-3			dBm	
Return Loss		12			dB	
Optical Path Penalty				1	dB	6
LOS De-Assert	LOSD			-19	dBm	
LOS Assert	LOSA	-35			dBm	
LOS Hysteresis		0.5			dB	7

Notes:

1. Output power is power coupled into a 9/125µm single-mode fiber.
2. LVPECL logic. Internally AC coupled and terminated into 100 differential loads.
3. CML logic. Internally AC coupled.
4. See Eye Pattern Mask diagram below.
5. Filtered, measured with a PRBS 2^7-1 test pattern @ 4.25Gbps.
6. Minimum average optical power at BER less than $1E^{-12}$ or lower with a 2^7-1 NRZ.
7. See LOS Hysteresis diagram below.

Eye Pattern Mask

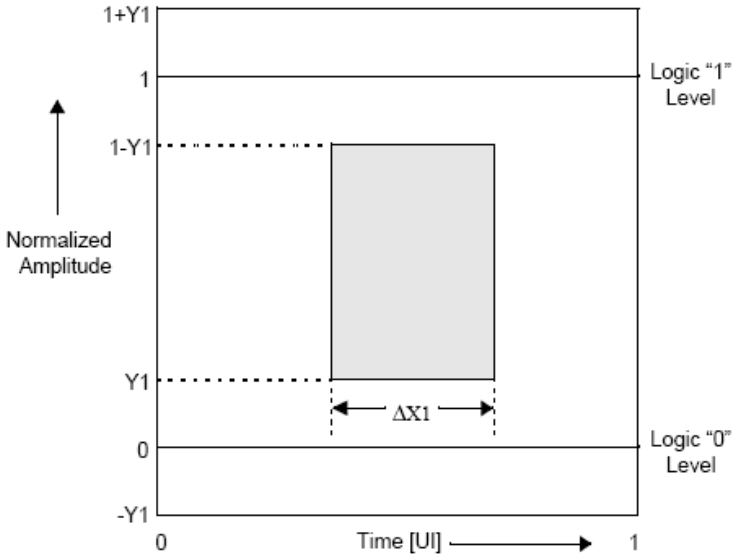

LOS Hysteresis

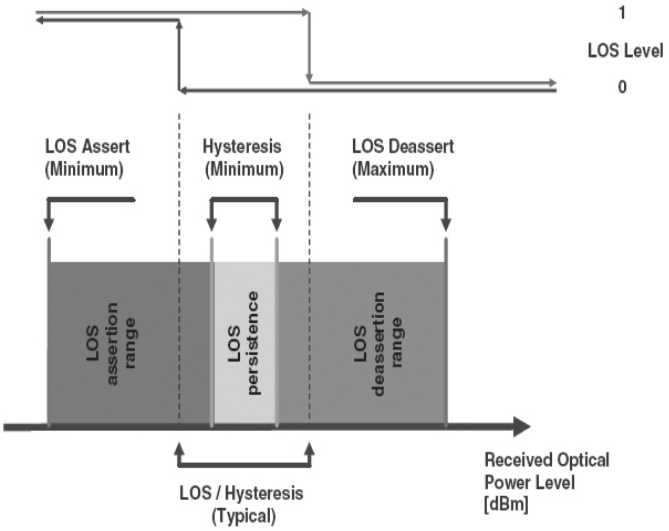

Pin Descriptions

Pin	Symbol	Name/Description	Plug Sequence	Notes
1	VeeT	Transmitter Ground.	1	5
2	Tx_Fault	Transmitter Fault Indication.	3	1
3	Tx_Disable	Transmitter Disable. Module disables on “high” or “open.”	3	2
4	MOD_DEF2	Module Definition 2. Data Line for Serial ID.	3	3
5	MOD_DEF1	Module Definition 1. Clock Line for Serial ID.	3	3
6	MOD_DEF0	Module Definition 0. Grounded within the module.	3	3
7	Rate Select	Not Connected. Function not available.	3	
8	LOS	Loss of Signal.	3	4
9	VeeR	Receiver Ground.	1	5
10	VeeR	Receiver Ground.	1	5
11	VeeR	Receiver Ground.	1	5
12	RD-	Inverted Received Data Out.	3	6
13	RD+	Received Data Out.	3	6
14	VeeR	Receiver Ground.	1	5
15	VccR	Receiver Power. 3.3 ± 5%.	2	7
16	VccT	Transmitter Power. 3.3 ± 5%.	2	7
17	VeeT	Transmitter Ground.	1	5
18	TD+	Transmit Data In.	3	8
19	TD-	Inverted Transmit Data In.	3	8
20	VeeT	Transmitter Ground.	1	5

Notes

1. Tx_Fault is an open collector/drain output that should be pulled up with a 4.7kΩ to 10kΩ resistor on the host board. Pull-up voltage is between 2.0V and VccT/R+0.3V. When “high,” output indicates a laser fault of some kind. “Low” indicates normal operation. In the “low” state, the output will be pulled to <0.8V.
2. Tx_Disable is an input that is used to shut down the transmitter optical output. It is pulled up within the module with a 4.7kΩ to 10kΩ resistor. Its states are:
   Low (0V – 0.8V): Transmitter On
   (>0.8V, <2.0V): Undefined
   High (2.0V – 3.465V): Transmitter Disabled
   Open: Transmitter Disabled.
3. MOD_DEF0, 1, & 2. These are the module definition pins. They should be pulled up with a 4.7kΩ to 10kΩ resistor on the host board. The pull-up voltage shall be VccT or VccR.
   MOD_DEF0 is grounded by the module to indicate that the module is present.
   MOD_DEF1 is the clock line of the 2-wire serial interface for serial ID.
   MOD_DEF2 is the data line of the 2-wire serial interface for serial ID.
4. LOS (Loss of Signal) is an open collector/drain output that should be pulled up with a 4.7kΩ to 10kΩ resistor. Pull-up voltage between 2.0V and VccT/R+0.3V. When “high,” this output indicates that the received optical power is below the worst-case receiver sensitivity (as defined by the standard in use). “Low” indicates normal operation. In the “low” state, the output will be pulled to <0.8V.
5. VeeR and VeeT may be internally connected within the SFP module.
6. RD-/+. These are the differential receiver outputs. They are AC-coupled, 100Ω differential lines that

should be terminated with 100Ω (differential) at the user SERDES. The AC coupling is done inside the module and is thus not required on the host board. The voltage swing on these lines will be between 400mV and 2000mV differential (200mV –1000mV single-ended) when properly terminated.

7. VccR and VccT are the receiver and transmitter power supplies. They are defined as 3.3V ±5% at the SFP connector pin. Maximum supply current is 300mA. Recommended host board power supply filtering is shown below. Inductors with DC resistance of less than 1Ω should be used in order to maintain the required voltage at the SFP input pin with 3.3V supply voltage. When the recommended supply-filtering network is used, hot-plugging of the SFP transceiver module will result in an in-rush current of no more than 30mA greater than the steady state value. VccR and VccT may be internally connected within the SFP transceiver module.
8. TD-/+. These are the differential transmitter inputs. They are AC-coupled, differential lines with 100Ω differential termination inside the module. The AC coupling is done inside the module and is thus not required on the host board. The inputs will accept differential swings of 400mV – 2000mV (200mV – 1000mV single-ended).

Pin-Out Details

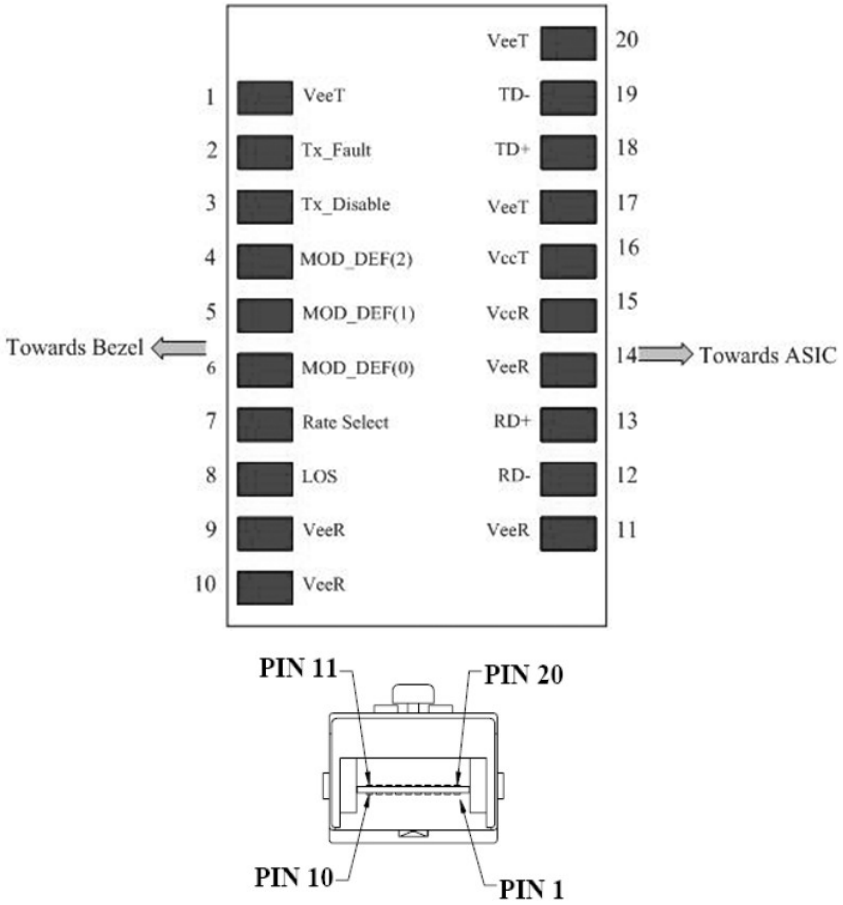

Recommended Circuit Schematic

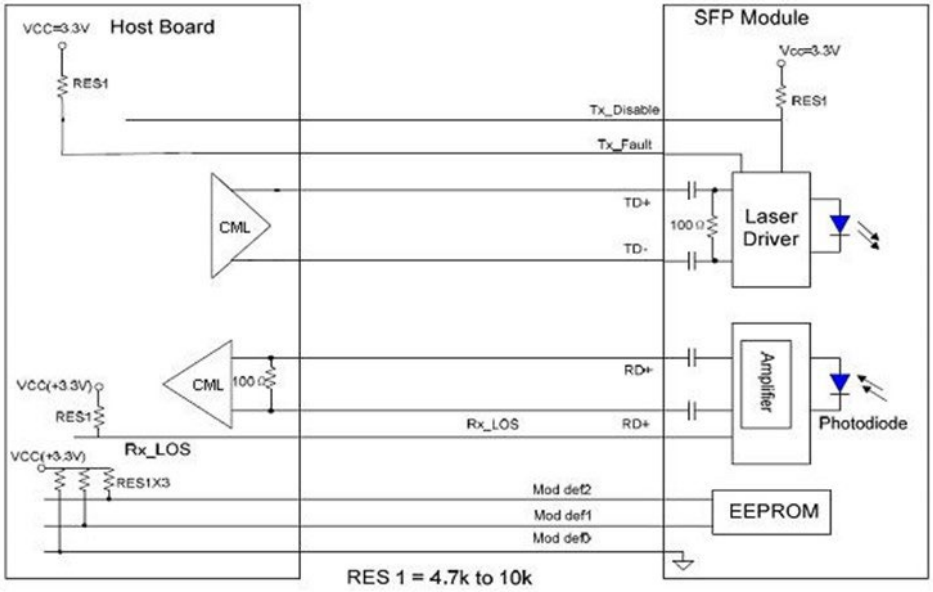

Functional Description of Transceiver

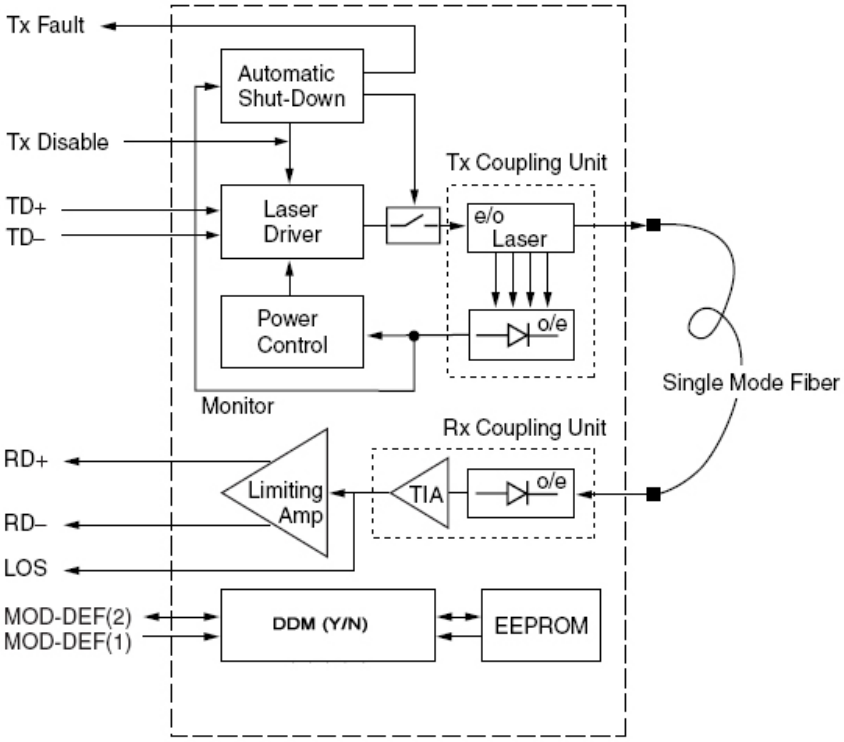

Mechanical Specifications

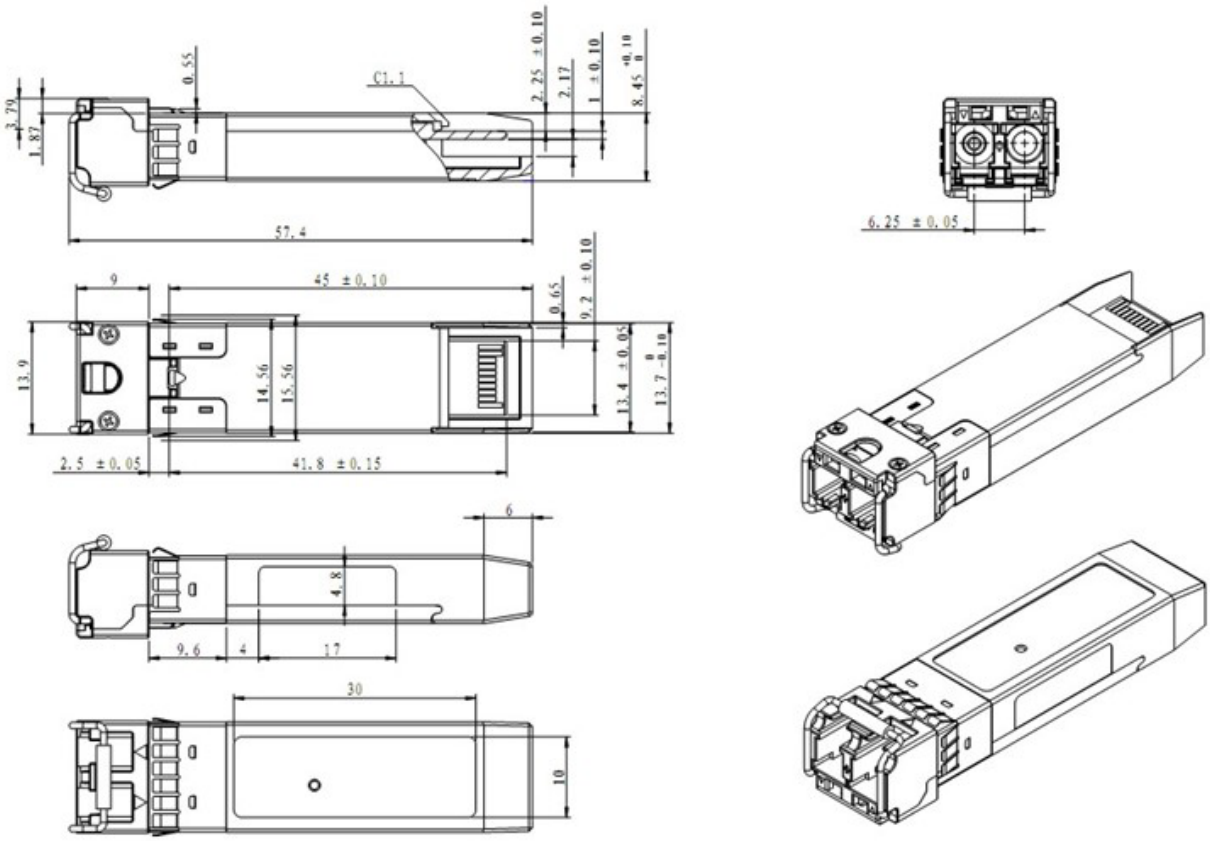

About Skylane Optics

Skylane is a leading provider of transceivers for optical communication.

We offer an extensive portfolio for the enterprise, access, datacenter and metropolitan fiber optical market as well as for smart home applications and home networks.

We cover the European, South American and North American market with a strong partner network and have offices in Belgium, Brazil, Sweden and USA.

Our offerings are characterized by high quality and performance. In combination with our strong technical support, we enable our customers to build cost optimized network solutions.

We offer an extensive range of high-quality products including transceivers (Optical and copper), Active Optical Cable (AOC), Direct Attach Cable (DAC), Mux/Demux, Coding Box.