SFP-28G-AOC2-5M-C-SKY

Cisco® Compatible 25GBase-AOC SFP28 to SFP28 Active Optical Cable (850nm, MMF, 2.5m)

Product Description

This is a Cisco® compatible 25GBase-CU SFP28 to SFP28 active optical cable that operates over active fiber with a maximum reach of 2.5m (8.2ft). At a wavelength of 850nm, it has been programmed, uniquely serialized, and data-traffic and application tested to ensure it is 100% compliant and functional. This active optical cable is built to comply with MSA (Multi-Source Agreement) standards. We stand behind the quality of our products and proudly offer a limited lifetime warranty.

Skylane's transceivers are RoHS compliant and lead-free.

Features:

- Hot-pluggable SFP28 form factor
- 850nm VCSEL laser and PIN photo-detector
- Supports 25Gbps data rate
- Single 3.3V power supply
- Power dissipation < 1W
- Internal CDR on both Transmitter and receiver channel
- Operating Case temperature: 0 to 70 Celsius
- Digital diagnostics functions are available via the I2C interface
- RoHS Compliant and Lead-Free

Applications:

- 25Gbase-SR Ethernet

For your product safety, please read the following information carefully before any manipulation of the transceiver:

ESD

This transceiver is specified as ESD threshold 1kV for SFI pins and 2kV for all others electrical input pins, tested per MIL-STD-883G, Method 3015.4 /JESD22-A114-A (HBM). However, normal ESD precautions are still required during the handling of this module.

LASER SAFETY

This is a Class1 Laser Product according to IEC 60825-1:2007. This product complies with 21 CFR 1040.10 and 1040.11 except for deviations pursuant to Laser Notice No. 50, dated (June 24, 2007).

The optical ports of the module need to be terminated with an optical connector or with a dust plug in order to avoid contamination.

General Specifications

Parameter	Symbol	Min	Typ.	Max.	Unit
Storage Temperature		-40		85	°C
Operating Case Temperature	Tc	0		70	°C
Power Supply Voltage	Vcc	3.13	3.3	3.47	V
Supply Voltage	Vcc	0		3.6	V
Storage Temperature	Tstg	-40		85	°C
Operating Humidity		5		85	%

Optical Characteristics

Parameter		Symbol	Min.	Typ.	Max.	Unit	Notes
Transmitter							
Data Rate		BR		25.78		Gbps	
Centre Wavelength		λc	840	850	860	nm	
Spectral Width (-20dB)		σ			0.6	nm	
Average Output Power		Pavg	-8.4		2.4	dBm	
Optical Power OMA		P_{OMA}	-6.4		3	dBm	
Extinction Ratio		ER	2			dB	
Differential data input swing		$V_{IN,PP}$	40		1000	mV	
Input Differential Impedance		ZIN	90	100	110	Ω	
TX Disable	**Disable**		2.0		Vcc	V	
	Enable		0		0.8	V	
TX Fault	**Fault**		2.0		Vcc	V	
	Normal		0		0.8	V	
Receiver							
Data Rate		BR		25.78		Gbps	
Centre Wavelength		λc	840	850	860	nm	
Receiver Sensitivity (OMA)		Psens			-10	dBm	
Stressed Sensitivity (OMA)					-5.2	dBm	
Receiver Power (OMA)					3	dBm	
LOS De-Assert		LOS_D			-13	dBm	
LOS Assert		LOS_A	-30			dBm	
LOS Hysteresis			0.5			dB	
Differential data output swing		Vout,PP	500		1130	mV	
LOS	**High**		2.0		Vcc	V	
	Low				0.8	V	

Pin Descriptions

Pin	Logic	Symbol	Name/Description	Notes
1		VeeT	Transmitter Ground.	
2	LV-TTL-O	TX_Fault	N/A	1
3	LV-TTL-I	TX_DIS	Transmitter Disable.	
4	LV-TTL-I/O	SDA	2-Wire Serial Data.	
5	LV-TTL-I	SCL	2-Wire Serial Clock.	
6		MOD_DEF0	Module present, connect to VeeT.	
7	LV-TTL-I	RS0	N/A	1
8	LV-TTL-O	LOS	LOS of Signal.	
9	LV-TTL-I	RS1	N/A	1
10		VeeR	Receiver Ground.	
11		VeeR	Receiver Ground.	
12	CML-O	RD-	Receiver Data Inverted.	
13	CML-O	RD+	Receiver Data Non-inverted.	
14		VeeR	Receiver Ground.	
15		VccR	Receiver Supply +3.3V.	
16		VccT	Transmitter Supply +3.3V.	
17		VeeT	Transmitter Ground.	
18	CML-I	TD+	Transmitter Data Non-Inverted.	
19	CML_I	TD-	Transmitter Data Inverted.	
20		VeeT	Transmitter Ground.	

Note:

1. Signals not supported in SFP28 Copper pulled-down to VeeT with 30kΩ resistor.

Host Board

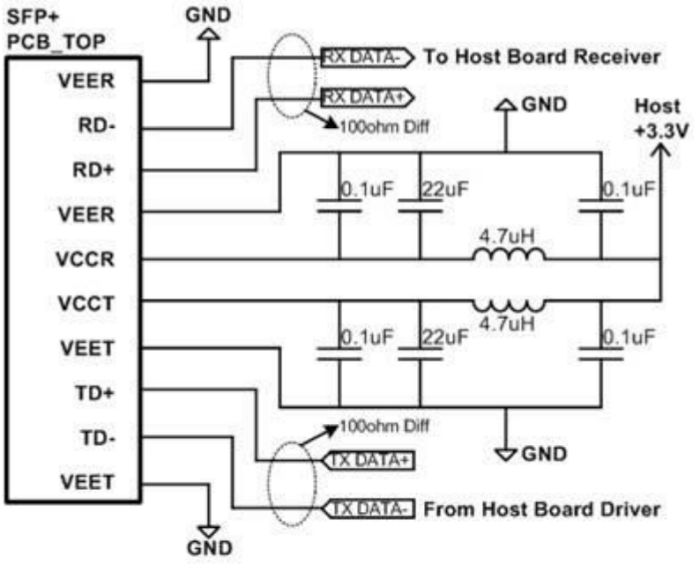
SFP+
PCB_TOP
GND
VEER
RD-
RD+
VEER
VCCR
VCCT
VEET
TD+
TD-
VEET
GND
RX DATA-
To Host Board Receiver
RX DATA+
100ohm Diff
GND
Host
+3.3V
0.1uF
22uF
0.1uF
4.7uH
4.7uH
0.1uF
22uF
0.1uF
100ohm Diff
TX DATA+
GND
TX DATA-
From Host Board Driver

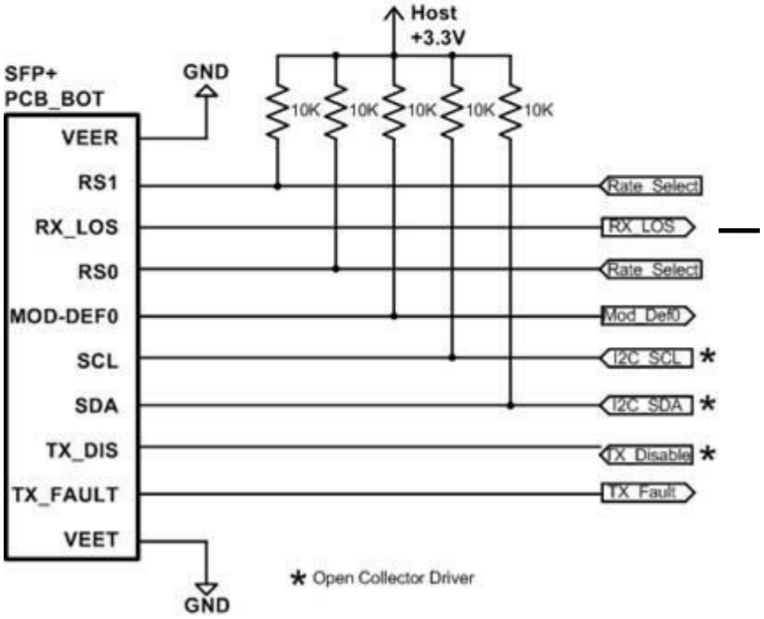
Host
+3.3V
SFP+
PCB_BOT
GND
10K
10K
10K
10K
10K
VEER
RS1
RX_LOS
RS0
MOD-DEF0
SCL
SDA
TX_DIS
TX_FAULT
VEET
Rate_Select
RX_LOS
Rate_Select
Mod_Def0
I2C_SCL *
I2C_SDA *
TX_Disable *
TX_Fault
GND
* Open Collector Driver

Mechanical Specification

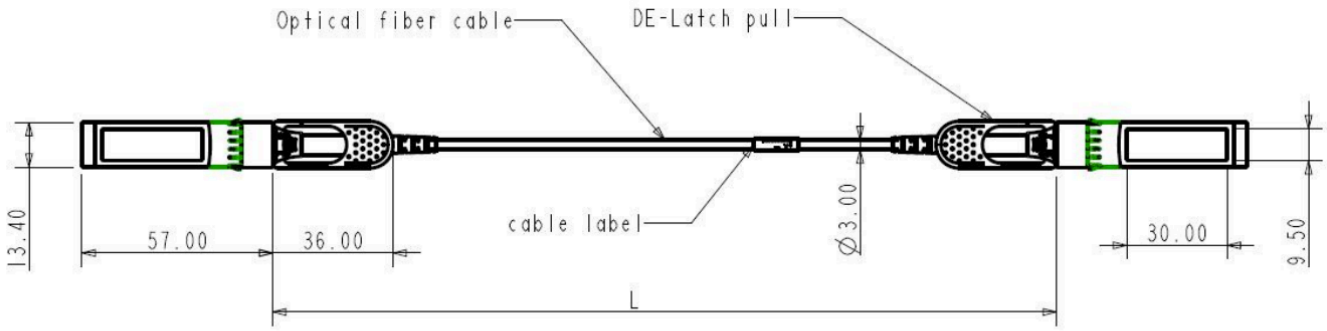

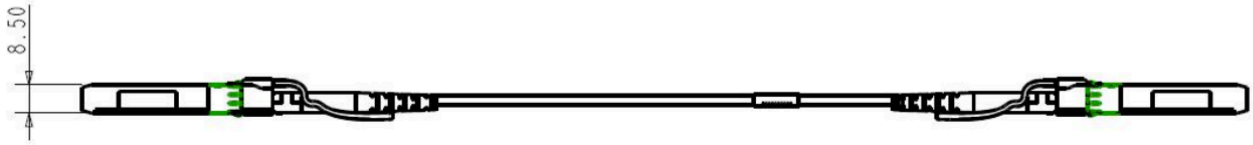

About Skylane Optics

Skylane is a leading provider of transceivers for optical communication.

We offer an extensive portfolio for the enterprise, access, datacenter and metropolitan fiber optical market as well as for smart home applications and home networks.

We cover the European, South American and North American market with a strong partner network and have offices in Belgium, Brazil, Sweden and USA.

Our offerings are characterized by high quality and performance. In combination with our strong technical support, we enable our customers to build cost optimized network solutions.

We offer an extensive range of high-quality products including transceivers (Optical and copper), Active Optical Cable (AOC), Direct Attach Cable (DAC), Mux/Demux, Coding Box.