SFP-25G-C1M-SKY

Alcatel-Lucent Nokia® SFP-25G-C1M Compatible 25GBase-CU SFP28 Direct Attach Cable (Passive Twinax, 1m)

Product Description

This is an Alcatel-Lucent Nokia® compatible 25GBase-CU SFP28 to SFP28 direct attach cable that operates over passive copper with a maximum reach of 1.0m (3.3ft). It has been programmed, uniquely serialized, and data-traffic and application tested to ensure it is 100% compliant and functional. This direct attach cable is built to comply with MSA (Multi-Source Agreement) standards. We stand behind the quality of our products and proudly offer a limited lifetime warranty.

Skylane's transceivers are RoHS compliant and lead-free.

Features:

- Up to 25Gbps bi-directional data links
- Hot-pluggable
- Compliant with SFF-8402
- 100 Ohm differential impedance
- Enhanced EMI design
- AC coupled inputs and outputs
- Operating Temperature: 0 to 70 Celsius
- Single power supply 3.3V
- RoHS Compliant and Lead-Free

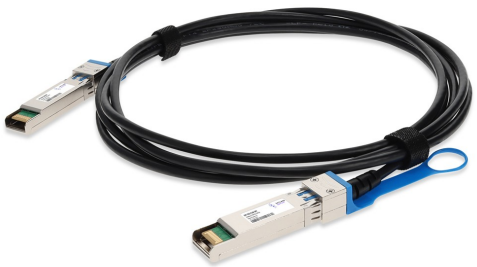

Applications:

- 25GBase Ethernet

For your product safety, please read the following information carefully before any manipulation of the transceiver:

ESD

This transceiver is specified as ESD threshold 1kV for SFI pins and 2kV for all others electrical input pins, tested per MIL-STD-883G, Method 3015.4 /JESD22-A114-A (HBM). However, normal ESD precautions are still required during the handling of this module.

LASER SAFETY

This is a Class1 Laser Product according to IEC 60825-1:2007. This product complies with 21 CFR 1040.10 and 1040.11 except for deviations pursuant to Laser Notice No. 50, dated (June 24, 2007).

The optical ports of the module need to be terminated with an optical connector or with a dust plug in order to avoid contamination.

General Specifications

Parameter	Symbol	Min.	Typ.	Max.	Unit	Notes
Data Rate	DR		25		Gbps	1
Bit Error Rate	BER			10^{-12}		
Operating Temperature	Tc	0		70	ºC	2
Storage Temperature	Tstg	-40		85	ºC	3
Supply Current	Icc			4	mA	4
Input Voltage	Vcc	3.14	3.3	3.46	V	4
Cable Impedance	Z	90	100	110	Ω	
Product Weight	GD		78		g/PCS	5
Cable Weight	GC		32		G/M	
Dust Cap Weight	GS		0.80		g/PCS	

Notes:

1. IEEE 802.3by.
2. Case temperature.
3. Ambient temperature.
4. For electrical power interface.

Cable Dimensions and Insertion Loss Level

Length	Standard Wire Gauge AWG	Cable Diameter OD (mm)	Minimum Bending Radius R (mm)	Insertion Loss Level (Note 1)	Tolerance Range (±cm)
1m	30AWG	4.6	26	CA-25G-N	2

Notes:

1. Cable insertion loss classification standard IEEE 802.3by 110-10.

Pin Descriptions

Pin	Symbol	Name/Description	Notes
1	VeeT	Transmitter Ground (Common with Receiver Ground).	1
2	Tx_Fault	Transmitter Failure Alarm. Not Used.	
3	Tx_Disable	Not Used. The signal turns off the module transmitter when it is “high” or “open.”	
4	SDA	Data Line for Serial ID.	2
5	SCL	Clock Line for Serial ID.	2
6	MOD_ABS	Module Absent. Grounded within the module.	2
7	RS0	No Connection Required.	
8	LOS	Loss of Signal Indication. “Logic 0” indicates normal operation.	
9	RS1	No Connection Required.	
10	VeeR	Receiver Ground (Common with Transmitter Ground).	1
11	VeeR	Receiver Ground (Common with Transmitter Ground).	1
12	RD-	Receiver Inverted Data Out. AC Coupled.	
13	RD+	Receiver Non-Inverted Data Out. AC Coupled.	
14	VeeR	Receiver Ground (Common with Transmitter Ground).	1
15	VccR	Receiver Power Supply.	
16	VccT	Transmitter Power Supply.	
17	VeeT	Transmitter Ground (Common with Receiver Ground).	1
18	TD+	Transmitter Non-Inverted Data In. AC Coupled.	
19	TD-	Transmitter Inverted Data In. AC Coupled.	
20	VeeT	Transmitter Ground (Common with Receiver Ground).	1

Notes:

1. The circuit ground is isolated from the chassis ground.
2. Should be pulled up with 4.7kΩ to 10kΩ on the host board to a voltage between 2V and 3.6V.

Electrical Pad Layout

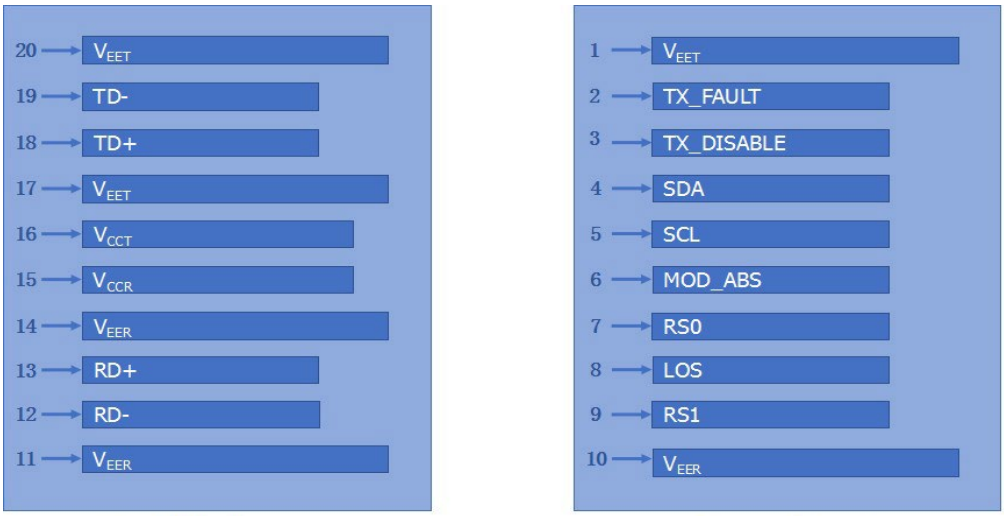

Top of Board

Bottom of Board

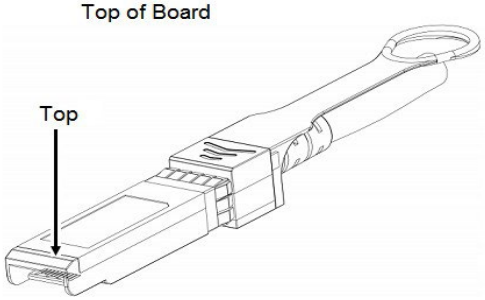

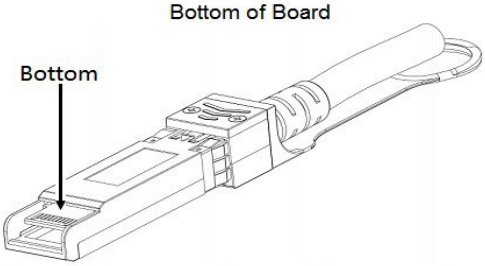

Block Diagram of Transceiver

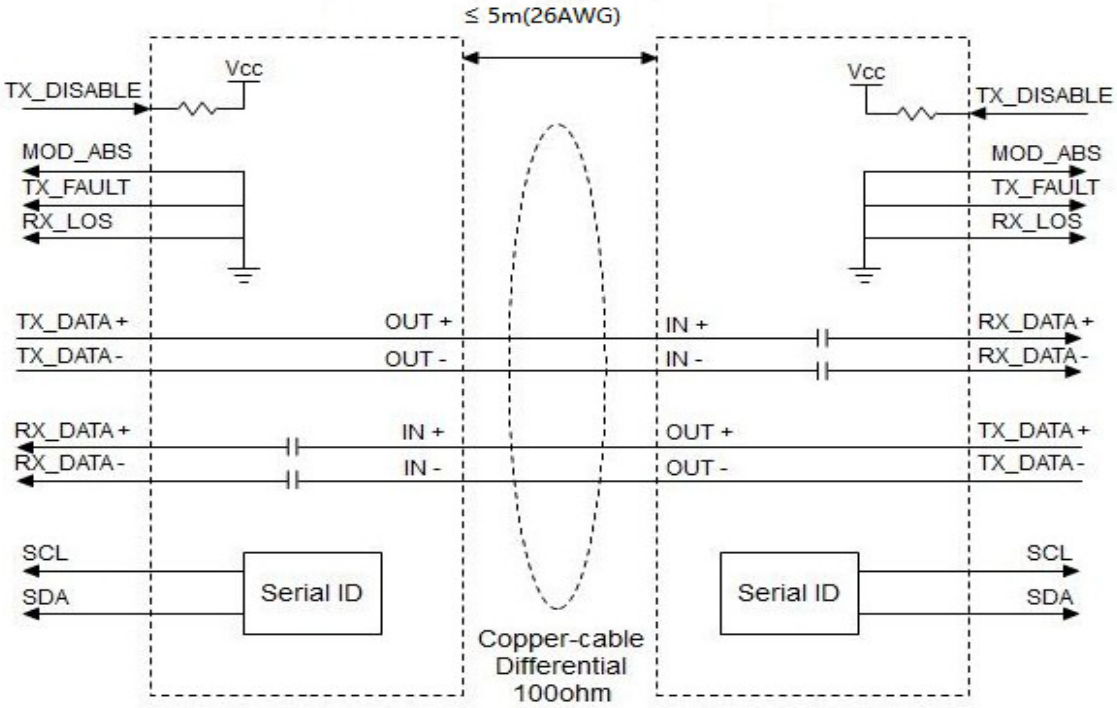

Mechanical Specifications

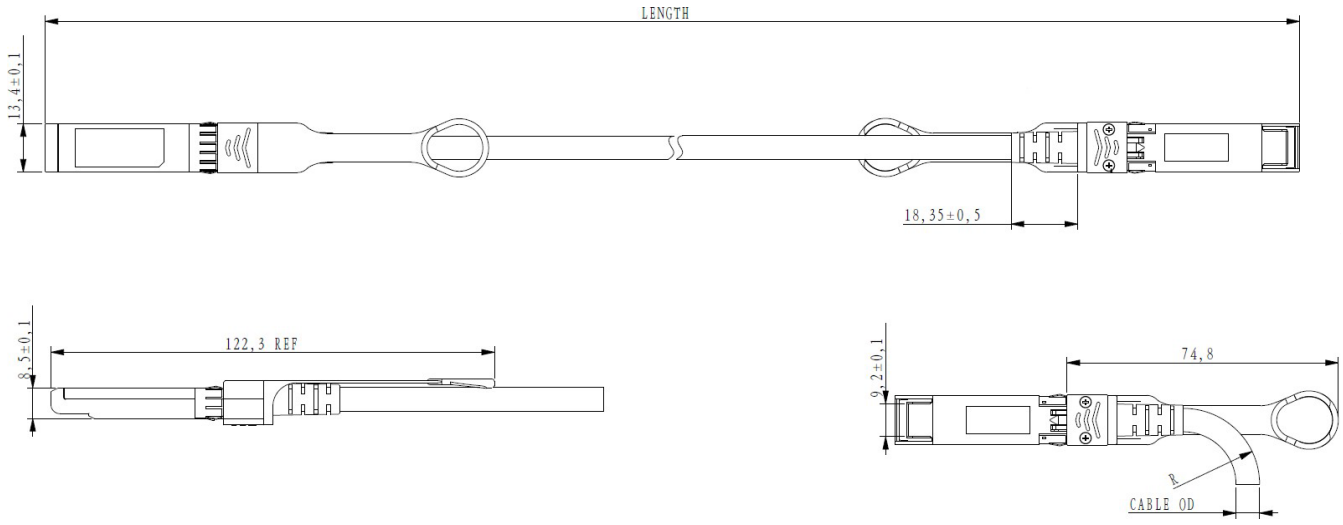

Unmarked Tolerance ±0.2
Unit: mm

About Skylane Optics

Skylane is a leading provider of transceivers for optical communication.

We offer an extensive portfolio for the enterprise, access, datacenter and metropolitan fiber optical market as well as for smart home applications and home networks.

We cover the European, South American and North American market with a strong partner network and have offices in Belgium, Brazil, Sweden and USA.

Our offerings are characterized by high quality and performance. In combination with our strong technical support, we enable our customers to build cost optimized network solutions.

We offer an extensive range of high-quality products including transceivers (Optical and copper), Active Optical Cable (AOC), Direct Attach Cable (DAC), Mux/Demux, Coding Box.