# SFP-1G-PDAC2M-ME-SKY

Cisco Meraki® Compatible 1000Base-CU SFP Direct Attach Cable (Passive Twinax, 2m)

**Product Description**

This is a Cisco Meraki® compatible 1000Base-CU SFP to SFP direct attach cable that operates over passive copper with a maximum reach of 2.0m (6.6ft). It has been programmed, uniquely serialized, and data-traffic and application tested to ensure it is 100% compliant and functional. This direct attach cable is built to comply with MSA (Multi-Source Agreement) standards. We stand behind the quality of our products and proudly offer a limited lifetime warranty.

Skylane's transceivers are RoHS compliant and lead-free.

**Features:**

- Up to 10 Gbps bi-directional data links
- Compliant with SFF-8431
- Compliant with 10GFC
- 100 Ohm differential impedance
- Enhanced EMI design
- AC coupled inputs and outputs
- Operating Temperature Range: 0 to 70 Celsius
- Single 3.3V power supply
- RoHS Compliant and Lead-Free

**Applications:**

- 10G Ethernet
- Serial Data Transmission
- 10G Fibre Channel

*For your product safety, please read the following information carefully before any manipulation of the transceiver:*

*ESD*

*This transceiver is specified as ESD threshold 1kV for SFI pins and 2kV for all others electrical input pins, tested per MIL-STD-883G, Method 3015.4 /JESD22-A114-A (HBM). However, normal ESD precautions are still required during the handling of this module.*

*LASER SAFETY*

*This is a Class1 Laser Product according to IEC 60825-1:2007. This product complies with 21 CFR 1040.10 and 1040.11 except for deviations pursuant to Laser Notice No. 50, dated (June 24, 2007).*

***The optical ports of the module need to be terminated with an optical connector or with a dust plug in order to avoid contamination.***

## General Specifications

| Parameter | Symbol | Min. | Typ. | Max. | Unit | Notes |
|---|---|---|---|---|---|---|
| **Data Rate** | DR | | 10.3125 | | Gbps | 1 |
| **Bit Error Rate** | BER | | | $10^{-12}$ | | |
| **Operating Temperature** | Tc | 0 | | 70 | °C | 2 |
| **Storage Temperature** | Tstg | -40 | | 85 | °C | 3 |
| **Power Supply Voltage** | Vcc | 3.14 | 3.30 | 3.46 | V | 4 |

**Notes:**

1. IEEE 802.3ae.
2. Case Temperature.
3. Ambient Temperature.
4. For the electrical power interface.

## Cable Specifications

| Parameter | Symbol | Min. | Typ. | Max. | Unit |
|---|---|---|---|---|---|
| **Wire Gauge** | | | 30AWG | | AWG |
| **Cable Impedance** | Z | 90 | 100 | 110 | Ω |
| **Cable Diameter** | OD | | 4.2 | | mm |
| **Minimum Bending Radius** | R | | 25 | | mm |
| **Tolerance Range ±** | | | 2 | | cm |

**Pin Descriptions**

| Pin | Symbol | Name/Description | Notes |
|---|---|---|---|
| **1** | VeeT | Transmitter Ground (Common with Receiver Ground). | 1 |
| **2** | Tx_Fault | Transmitter Failure Alarm. Not Used. | |
| **3** | Tx_Disable | Not Used. The signal turns off the module transmitter when it is “high” or “open.” | |
| **4** | SDA | Data Line for Serial ID. | 2 |
| **5** | SCL | Clock Line for Serial ID. | 2 |
| **6** | MOD_ABS | Module Absent. Grounded within the module. | 2 |
| **7** | RS0 | No Connection Required. | |
| **8** | LOS | Loss of Signal Indication. “Logic 0” indicates normal operation. | |
| **9** | RS1 | No Connection Required. | |
| **10** | VeeR | Receiver Ground (Common with Transmitter Ground). | 1 |
| **11** | VeeR | Receiver Ground (Common with Transmitter Ground). | 1 |
| **12** | RD- | Receiver Inverted Data Out. AC Coupled. | |
| **13** | RD+ | Receiver Non-Inverted Data Out. AC Coupled. | |
| **14** | VeeR | Receiver Ground (Common with Transmitter Ground). | 1 |
| **15** | VccR | Receiver Power Supply. | |
| **16** | VccT | Transmitter Power Supply. | |
| **17** | VeeT | Transmitter Ground (Common with Receiver Ground). | 1 |
| **18** | TD+ | Transmitter Non-Inverted Data In. AC Coupled. | |
| **19** | TD- | Transmitter Inverted Data In. AC Coupled. | |
| **20** | VeeT | Transmitter Ground (Common with Receiver Ground). | 1 |

**Notes:**

1. The circuit ground is isolated from the chassis ground.
2. Should be pulled up with 4.7kΩ to 10kΩ on the host board to a voltage between 2V and 3.6V.

## Electrical Pad Layout

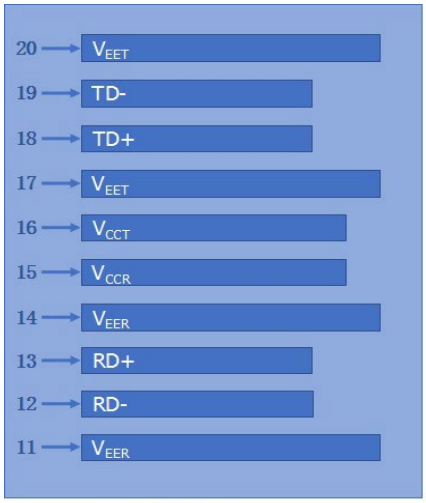


Top of Board

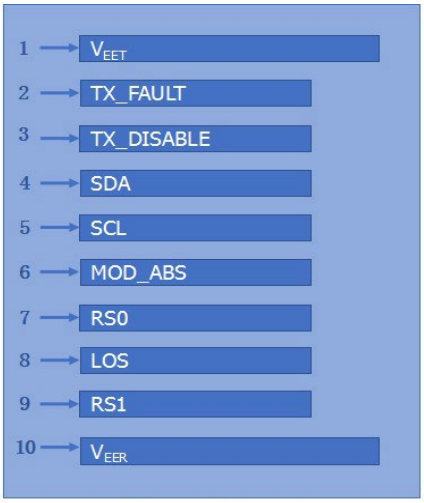


Bottom of Board

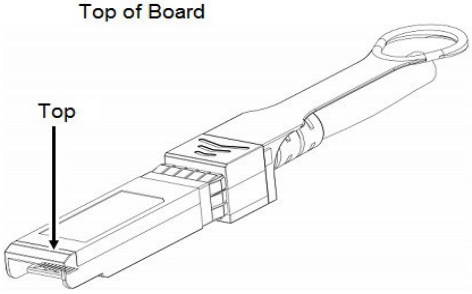


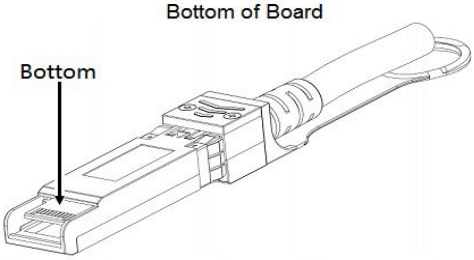


## Block Diagram of Transceiver

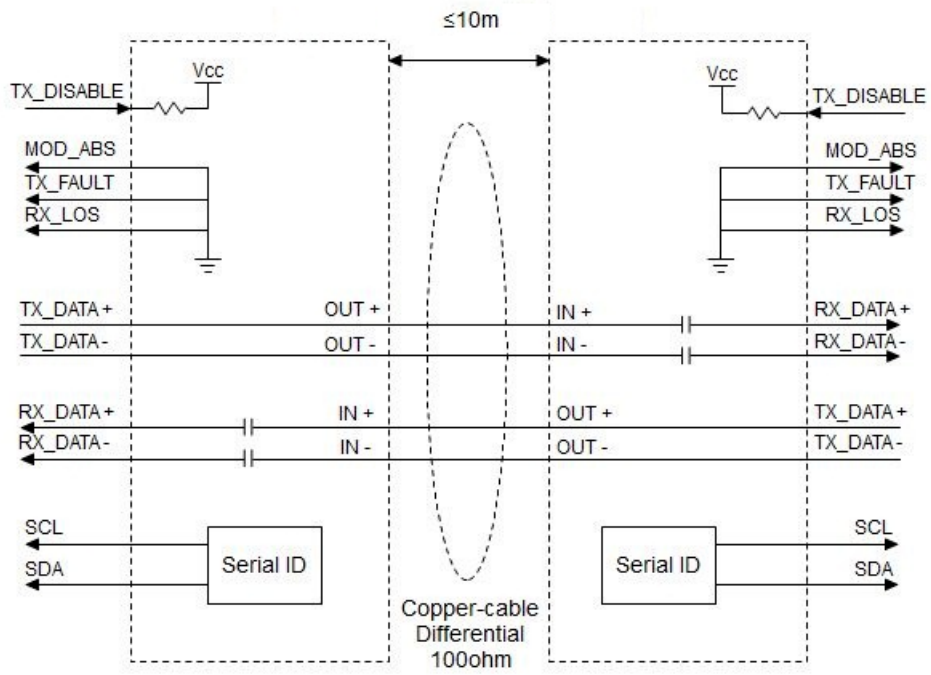

## Weight

| Parameter | Symbol | Typ. | Unit | Notes |
|---|---|---|---|---|
| **30AWG Product Weight** | GD30 | 72 | g/PCS | 1 |
| **30AWG Cable Weight** | GC30 | 26 | g/M | |
| **Dust Cap Weight** | GS | 0.80 | g/PCS | |

**Notes:**

1. For example, the weight of a 6m cable with 30AWG is: 72+26*(6-1) + 0.80*2=203.6g.

## Mechanical Specifications

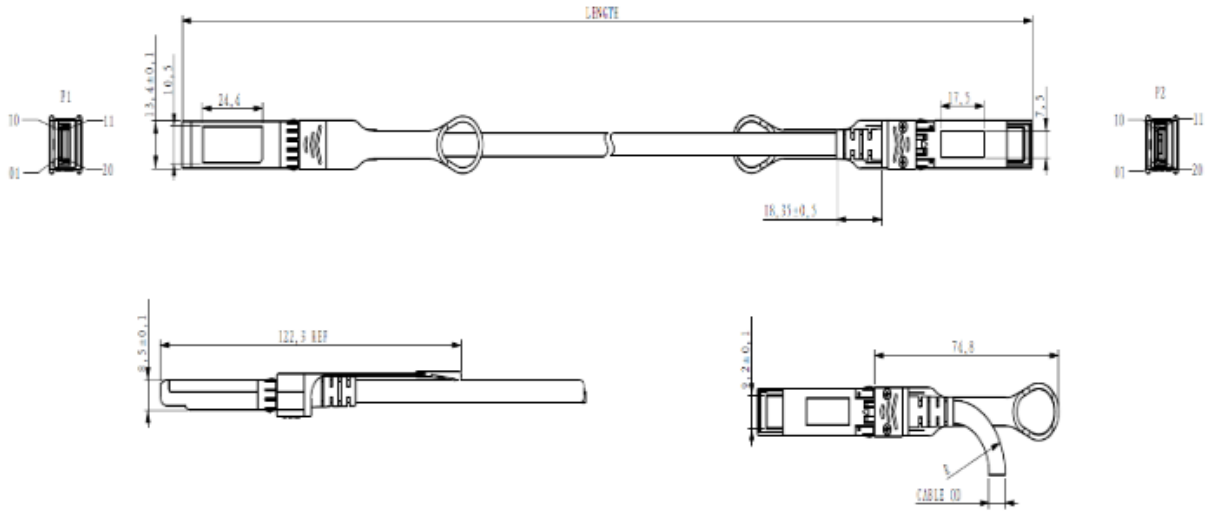


All Dimensions are ±0.2mm Unless Otherwise Specified
Unit: mm

# About Skylane Optics

Skylane is a leading provider of transceivers for optical communication.

We offer an extensive portfolio for the enterprise, access, datacenter and metropolitan fiber optical market as well as for smart home applications and home networks.

We cover the European, South American and North American market with a strong partner network and have offices in Belgium, Brazil, Sweden and USA.

Our offerings are characterized by high quality and performance. In combination with our strong technical support, we enable our customers to build cost optimized network solutions.

We offer an extensive range of high-quality products including transceivers (Optical and copper), Active Optical Cable (AOC), Direct Attach Cable (DAC), Mux/Demux, Coding Box.