# SFP-10GB-CW-27-10-SKY

MSA Compliant 10GBase-CWDM SFP+ Transceiver (SMF, 1270nm, 10km, LC, DOM)

**Product Description**

This MSA compliant SFP+ transceiver provides 10GBase-CWDM throughput up to 10km over single-mode fiber (SMF) using a wavelength of 1270nm via an LC connector. It can operate at temperatures between 0 and 70C. The listed reach has been determined using a link budget calculation and tested in a standard environment. Actual link distances achieved will be dependent upon the deployed environment. All of our transceivers are built to comply with Multi-Source Agreement (MSA) standards and are uniquely serialized and tested for data-traffic and application to ensure seamless network integration. Additional product features include Digital Optical Monitoring (DOM) support which allows access to real-time operating parameters. We stand behind the quality of our products and proudly offer a limited lifetime warranty.

Skylane's transceivers are RoHS compliant and lead-free.

**Features:**

- Single 3.3V Power Supply Voltage
- Compliant with IEEE 802.3ae 10GBASE-LR/LW
- CWDM DFB Laser Transmitter
- Single-Mode Fiber
- Hot-Pluggable
- Up to 10.7Gbps Bi-Directional Data Links
- Operating Temperature: 0 to 70 Celsius
- Duplex LC Connector
- Excellent ESD Protection
- RoHS Compliant and Lead-Free
- RoHS Compliant and Lead Free

**Applications:**

- 10x Gigabit Ethernet over CWDM
- Access, Metro and Enterprise
- 8x/10x Fibre Channel
- Mobile Fronthaul CPRI/OBSAI

*For your product safety, please read the following information carefully before any manipulation of the transceiver:*

*ESD*
*This transceiver is specified as ESD threshold 1kV for SFI pins and 2kV for all others electrical input pins, tested per MIL-STD-883G, Method 3015.4 /JESD22-A114-A (HBM). However, normal ESD precautions are still required during the handling of this module.*

*LASER SAFETY*
*This is a Class1 Laser Product according to IEC 60825-1:2007. This product complies with 21 CFR 1040.10 and 1040.11 except for deviations pursuant to Laser Notice No. 50, dated (June 24, 2007).*

***The optical ports of the module need to be terminated with an optical connector or with a dust plug in order to avoid contamination.***

## CWDM Available Wavelengths

| Wavelengths | Min. | Typ. | Max. |
|---|---|---|---|
| **27** | 1264.5 | 1271 | 1277.5 |
| **29** | 1284.5 | 1291 | 1297.5 |
| **31** | 1304.5 | 1311 | 1317.5 |
| **33** | 1324.5 | 1331 | 1337.5 |
| **35** | 1344.5 | 1351 | 1357.5 |
| **37** | 1364.5 | 1371 | 1377.5 |
| **39** | 1384.5 | 1391 | 1397.5 |
| **41** | 1404.5 | 1411 | 1417.5 |
| **43** | 1424.5 | 1431 | 1437.5 |
| **45** | 1444.5 | 1451 | 1457.5 |
| **47** | 1464.5 | 1471 | 1477.5 |
| **49** | 1484.5 | 1491 | 1497.5 |
| **51** | 1504.5 | 1511 | 1517.5 |
| **53** | 1524.5 | 1531 | 1537.5 |
| **55** | 1544.5 | 1551 | 1557.5 |
| **57** | 1564.5 | 1571 | 1577.5 |
| **59** | 1584.5 | 1591 | 1597.5 |
| **61** | 1604.5 | 1611 | 1617.5 |

## Absolute Maximum Ratings

| Parameter | Symbol | Min. | Typ. | Max. | Unit | Notes |
|---|---|---|---|---|---|---|
| **Maximum Supply Voltage** | Vcc | -0.5 | | 4.0 | V | 1 |
| **Storage Temperature** | Tstg | -40 | | 90 | °C | 2 |
| **Operating Case Temperature** | Tc | 0 | | 70 | °C | 3 |
| **Maximum Bitrate** | BER | | | $10^{-12}$ | | |
| **Data Rate** | DR | | 10.3125 | | Gbps | 4 |

**Notes:**

1. For the electrical power interface.
2. Ambient temperature.
3. Case temperature.

**Electrical Characteristics**

| Parameter | Symbol | Min. | Typ. | Max. | Unit | Notes |
|---|---|---|---|---|---|---|
| **Power Supply Voltage** | Vcc | 3.14 | 3.30 | 3.46 | V | |
| **Power Supply Current** | Icc | | 200 | 310 | mA | 1 |
| **Power Consumption** | PC | | 0.65 | 1.0 | W | |
| **Transmitter** | | | | | | |
| **Differential Data Input Swing** | VIN,pp | 180 | | 700 | mV | |
| **Input Differential Impedance** | RIN | | 100 | | Ω | |
| **Transmit Disable Voltage** | VD | 2 | | Vcc | V | |
| **Transmit Enable Voltage** | VEN | Vee | | Vee+0.8 | V | |
| **Receiver** | | | | | | |
| **Differential Data Output Swing** | VOUT,pp | 300 | | 850 | mV | |
| **Output Differential Impedance** | Tr/Tf | 28 | | | ps | |
| **LOS Assert** | VLOSA | 2 | | Host_Vcc | V | |
| **LOS De-Assert** | VLOSD | Vee | | Vee+0.5 | V | |

**Notes:**

1. For the electrical power interface.

## Optical Characteristics

| Parameter | Symbol | Min. | Typ. | Max. | Unit | Notes |
|---|---|---|---|---|---|---|
| **Transmitter** | | | | | | |
| **Optical Power (Average)** | $P_{TX}$ | 2 | | 7 | dBm | 1 |
| **Transmitter Dispersion Penalty** | TDP | | | 1 | dB | |
| **Optical Extinction Ratio** | ER | 3.5 | | | dB | |
| **Optical Wavelength** | λC | λ-6.5 | λ | λ+6.5 | nm | |
| **Side-Mode Suppression Ratio** | SMSR | 30 | | | dB | |
| **Relative Intensity Noise** | RIN | | | -128 | dB/Hz | |
| **Launch Power of Off Transmitter** | Poff | | | -30 | dBm | 1 |
| **Receiver** | | | | | | |
| **Receiver Sensitivity @10.3Gbps** | $R_{X_SEN}$ | | | -14.4 | dBm | 2 |
| **Receiver Overload** | $P_{OL}$ | 2 | | | dBm | |
| **Receiver Wavelength** | λC | 1260 | | 1620 | nm | |
| **Receiver Reflectance** | $TR_{RX}$ | | | -12 | dB | |
| **LOS Assert** | LOSA | -30 | | | dBm | |
| **LOS De-Assert** | LOSD | | | -17 | dBm | |
| **LOS Hysteresis** | LOSH | 0.5 | | | dB | |

**Notes:**

1. Average.
2. Average. Measured with worst ER, BER<$10^{-12}$, and $2^{31}$-1 PRBS.

**Pin Descriptions**

| Pin | Symbol | Name/Description | Notes |
|---|---|---|---|
| **1** | VeeT | Transmitter Ground (Common with Receiver Ground). | 1 |
| **2** | Tx_Fault | Transmitter Fault. | 2 |
| **3** | Tx_Disable | Transmitter Disable. Laser output disabled on “high” or “open.” | 3 |
| **4** | SDA | 2-Wire Serial Interface Data. | 4 |
| **5** | SCL | 2-Wire Serial Interface Clock. | 4 |
| **6** | MOD_ABS | Module Absent. Grounded within the module. | 4 |
| **7** | RS0 | No Connection Required. | |
| **8** | Rx_LOS | Loss of Signal Indication. “Logic 0” indicates normal operation. | 5 |
| **9** | RS1 | No Connection Required. | 1 |
| **10** | VeeR | Receiver Ground (Common with Transmitter Ground). | 1 |
| **11** | VeeR | Receiver Ground (Common with Transmitter Ground). | 1 |
| **12** | RD– | Receiver Inverted Data Out. AC Coupled. | |
| **13** | RD+ | Receiver Non-Inverted Data Out. AC Coupled. | |
| **14** | VeeR | Receiver Ground (Common with Transmitter Ground). | 1 |
| **15** | VccR | Receiver Power Supply. | |
| **16** | VccT | Transmitter Power Supply. | |
| **17** | VeeT | Transmitter Ground (Common with Receiver Ground). | 1 |
| **18** | TD+ | Transmitter Non-Inverted Data In. AC Coupled. | |
| **19** | TD– | Transmitter Inverted Data In. AC Coupled. | |
| **20** | VeeT | Transmitter Ground (Common with Receiver Ground). | 1 |

**Notes:**

1. The circuit ground is isolated from the chassis ground.
2. Tx_Fault is the open collector output and should be pulled up with 4.7kΩ to 10kΩ on the host board to a voltage between 2V and Vcc+0.3V.
3. Disabled: $T_{DIS}$>2V or open, enabled: $T_{DIS}$<0.8V.
4. Should be pulled up with 4.7kΩ to 10kΩ on the host board to a voltage between 2V and Vcc+0.3V.
5. LOS is an open collector output and should be pulled up with 4.7kΩ to 10kΩ on the host board to a voltage between 2V and Vcc+ 0.3V. The “logic 0” indicates normal operation. “Logic 1” indicates that the receiver signal is lost.

## Electrical Pad Layout

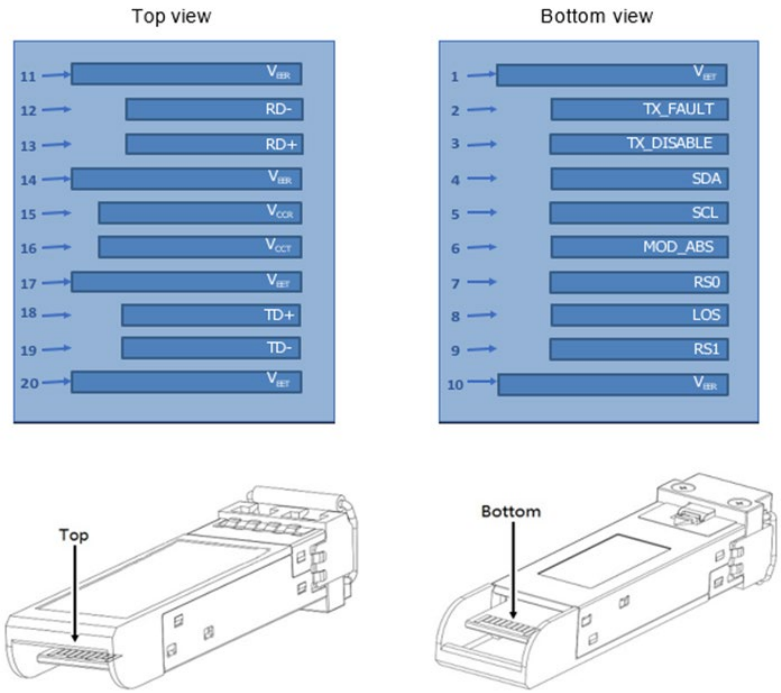


## Block Diagram of Transceiver

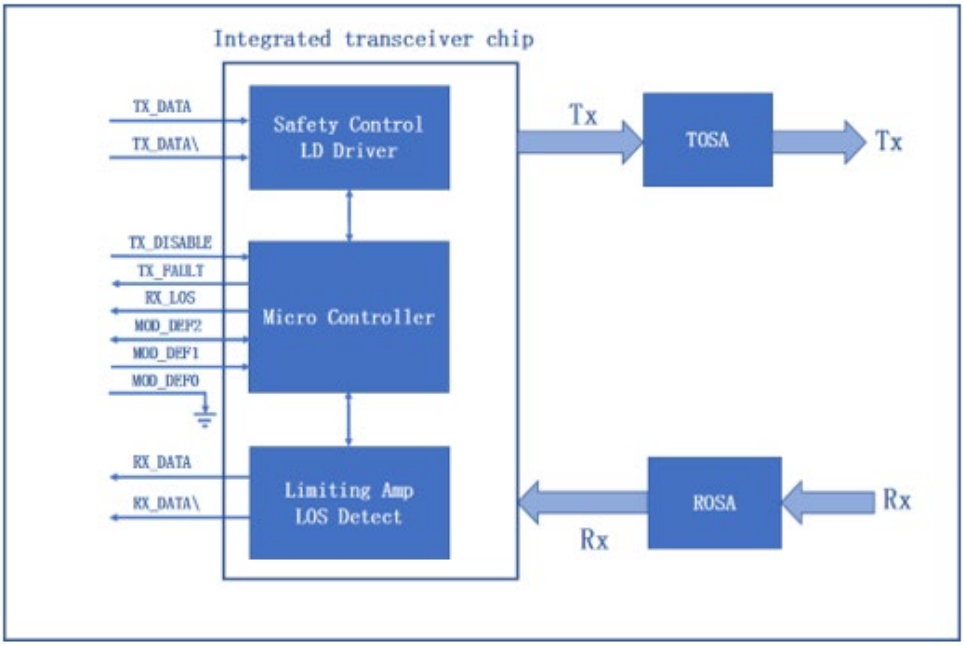

**Mechanical Specifications**

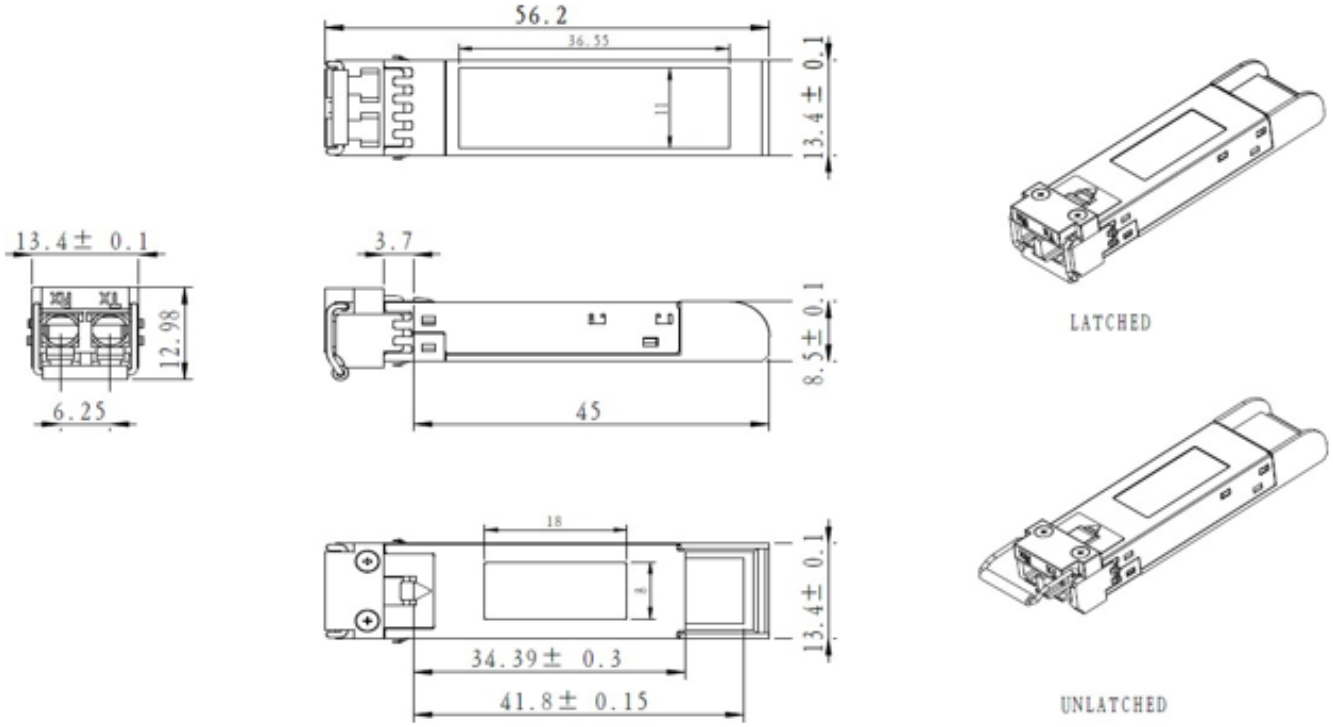

# About Skylane Optics

Skylane is a leading provider of transceivers for optical communication.

We offer an extensive portfolio for the enterprise, access, datacenter and metropolitan fiber optical market as well as for smart home applications and home networks.

We cover the European, South American and North American market with a strong partner network and have offices in Belgium, Brazil, Sweden and USA.

Our offerings are characterized by high quality and performance. In combination with our strong technical support, we enable our customers to build cost optimized network solutions.

We offer an extensive range of high-quality products including transceivers (Optical and copper), Active Optical Cable (AOC), Direct Attach Cable (DAC), Mux/Demux, Coding Box.