SFP-10G-AOC50M-J-SKY

Juniper Networks® Compatible 10GBase-AOC SFP+ Active Optical Cable (850nm, MMF, 50m)

Product Description

This is a Juniper Networks® compatible 10GBase-AOC SFP+ to SFP+ active optical cable that operates over multi-mode fiber with a maximum reach of 50.0m (164.0ft). At a wavelength of 850nm, it has been programmed, uniquely serialized, and data-traffic and application tested to ensure it is 100% compliant and functional. This active optical cable is built to comply with MSA (Multi-Source Agreement) standards. We stand behind the quality of our products and proudly offer a limited lifetime warranty.

Skylane's transceivers are RoHS compliant and lead-free.

Features:

- High Speed/ High Density: Supports up to 10Gbps bi-directional operation
- Reliable VCSEL and PIN photonic devices
- Compliant to SFP MSA Standards
- Excellent High Speed Signal Interface
- Operating Temperature: 0 to 70 Celsius
- I2C Standard Management Interface
- RoHS Compliant and Lead-Free

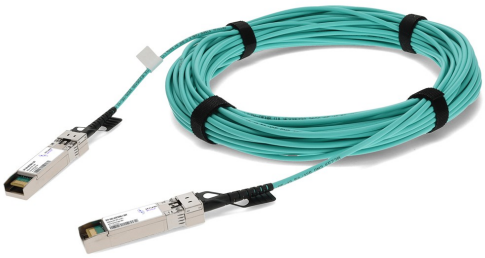

Applications:

- 10GBase Ethernet
- High Performance Computing, Server, and Data Starage

For your product safety, please read the following information carefully before any manipulation of the transceiver:

ESD

This transceiver is specified as ESD threshold 1kV for SFI pins and 2kV for all others electrical input pins, tested per MIL-STD-883G, Method 3015.4 /JESD22-A114-A (HBM). However, normal ESD precautions are still required during the handling of this module.

LASER SAFETY

This is a Class1 Laser Product according to IEC 60825-1:2007. This product complies with 21 CFR 1040.10 and 1040.11 except for deviations pursuant to Laser Notice No. 50, dated (June 24, 2007).

The optical ports of the module need to be terminated with an optical connector or with a dust plug in order to avoid contamination.

Absolute Maximum Ratings

Parameter	Symbol	Min.	Typ.	Max.	Unit	Notes
Storage Temperature	Tstg	-40		85	°C	
Operating Temperature	Tc	0	25	70	°C	
Relative Humidity	RH	5		85	%	
Maximum Supply Voltage	Vcc	0		3.6	V	
Data Rate			10.3		Gbps	

Electrical Characteristics

Parameter	Symbol	Min.	Typ.	Max.	Unit	Notes
Supply Voltage	Vcc	3.135	3.3	3.465	V	
+3.3V Supply Current	Icc			290	mA	
Transmitter Fault (Tx_Fault)	VOH	2.0		Vcc	V	1
Loss of Signal (LOS)	VOL	0		0.8	V	1
Transmitter Disable (Tx_Disable)	VIH	2.0		Vcc	V	2
MOD_DEF1, MOD_DEF2	VIL	0		0.8	V	2
Clock Rate-I2C						3

Notes:

1. For all control input pins: Tx_Disable.
2. For all status output pins: Rx_LOS, Tx_Fault.
3. For the management interface.

Optical Characteristics

Parameter	Symbol	Min.	Typ.	Max.	Unit	Notes
Transmitter						
Reference Differential Input Impedance	ZD		100		Ω	1
Signal Speed			10.3		Gbps	2
Differential Data Input Swing	VIN,pp	180		700	mV	
Receiver						
Reference Differential Input Impedance	ZD		100		Ω	1
Signal Speed			10.3		Gbps	2
Differential Data Output Swing		150		850	mV	
Differential Data Output Swing When Squelched				50	mV	
Rise/Fall Time (20-80%)		24			ps	

Notes:

1. AC coupled inside the AOC module.
2. Tested with PRBS 2^{31}-1 and BER:10^{-12}.

Pin Descriptions

Pin	Symbol	Name/Description	Notes
1	VeeT	Transmitter Ground.	1
2	Tx_Fault	Transmitter Fault (LVTTL-O). “High” indicates a fault condition.	2
3	Tx_Disable	Transmitter Disable (LVTTL-I). “High” or “open” disables the transmitter.	3
4	SDA	2-Wire Serial Interface Data Line. LVCMOS-I/O. MOD_DEF2.	4
5	SCL	2-Wire Serial Interface Clock Line. LVCMOS-I/O. MOD_DEF1.	4
6	MOD_ABS	Module Absent (Output). Connected to the VeeT or VeeR in the module.	5
7	RS0	Rate Select 0. Not Used. Presents high input impedance.	
8	Rx_LOS	Receiver Loss of Signal. LVTTL-O.	2
9	RS1	Rate Select 1. Not Used. Presents high input impedance.	
10	VeeR	Receiver Ground.	1
11	VeeR	Receiver Ground.	1
12	RD-	Inverse Received Data Out (CML-O).	
13	RD+	Received Data Out (CML-O).	
14	VeeR	Receiver Ground.	
15	VccR	+3.3V Receiver Power.	
16	VccT	+3.3V Transmitter Power.	
17	VeeT	Transmitter Ground.	1
18	TD+	Transmitter Data In (CML-I).	
19	TD-	Inverse Transmitter Data In (CML-I).	
20	VeeT	Transmitter Ground.	1

Notes:

1. The module signal grounds are isolated from the module case.
2. This is an open collector/drain output that, on the host board, requires a 4.7kΩ to 10kΩ pull-up resistor to the Host_Vcc.
3. This input is internally biased "high" with a 4.7kΩ to 10kΩ pull-up resistor to the VccT.
4. 2-Wire Serial Interface Clock and Data Lines require an external pull-up resistor dependent on the capacitance load.
5. This is a ground return that, on the host board, requires a 4.7kΩ to 10kΩ pull-up resistor to the Host_Vcc.

Pin-Out Connectors

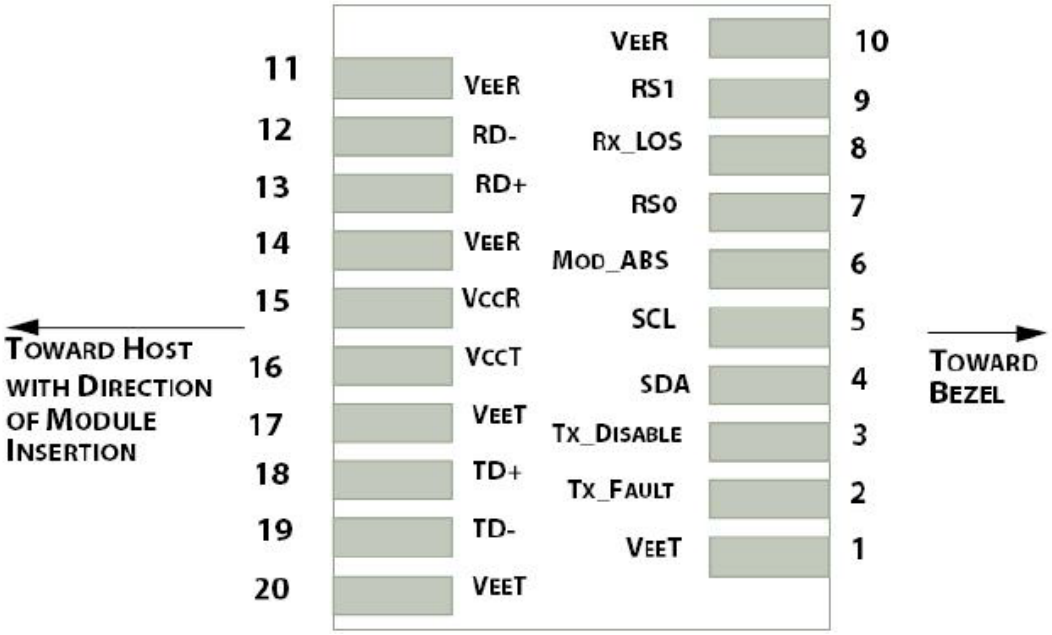

Application Interface Circuit

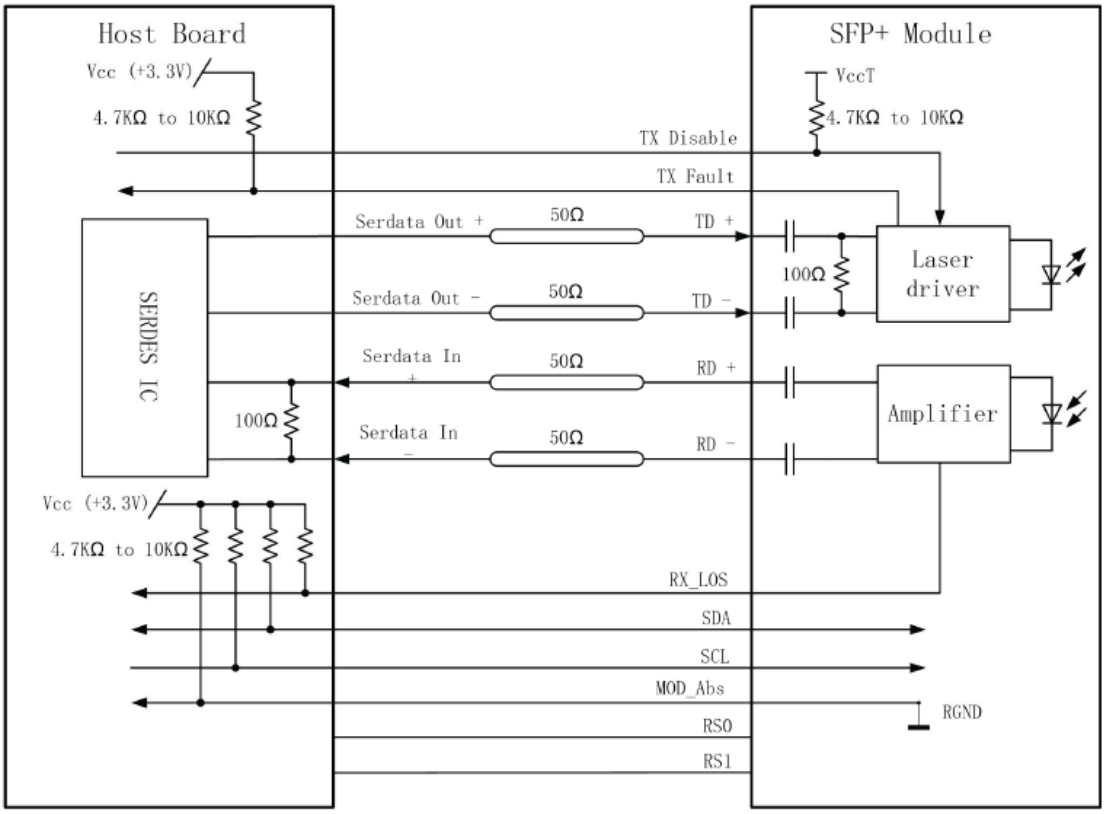

Mechanical Specifications

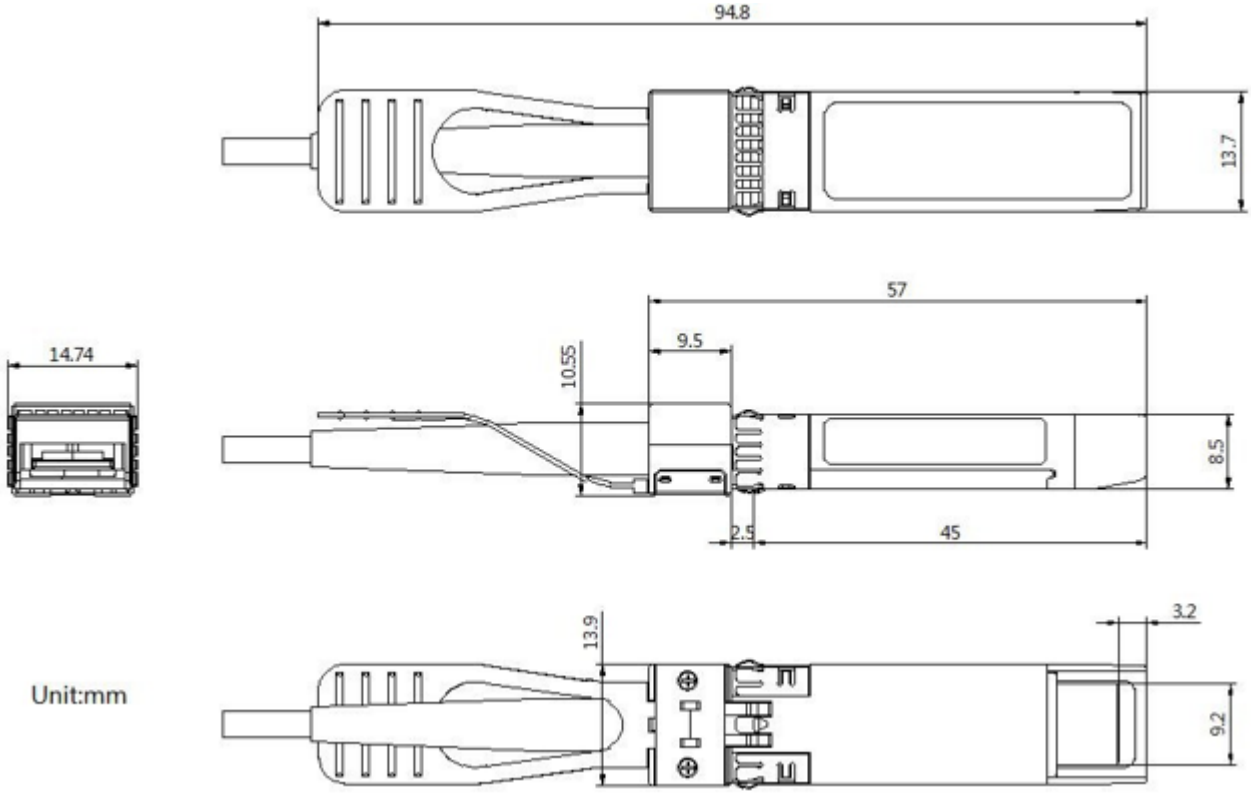

Parameter	Symbol	Min.	Typ.	Max.	Unit	Notes
Module Retention		90		170	N	
Module Insertion		0		18	N	
Module Extraction		0		25	N	
Cable Pull Strength – Apply Load at 0°		25			N	
Cable Pull Strength – Apply Load at 90°		20			N	
Cable Bending Radius		50			mm	
Insertion/Removal Cycles		50			Cycles	

About Skylane Optics

Skylane is a leading provider of transceivers for optical communication.

We offer an extensive portfolio for the enterprise, access, datacenter and metropolitan fiber optical market as well as for smart home applications and home networks.

We cover the European, South American and North American market with a strong partner network and have offices in Belgium, Brazil, Sweden and USA.

Our offerings are characterized by high quality and performance. In combination with our strong technical support, we enable our customers to build cost optimized network solutions.

We offer an extensive range of high-quality products including transceivers (Optical and copper), Active Optical Cable (AOC), Direct Attach Cable (DAC), Mux/Demux, Coding Box.