SBU35010FE3B000

MSA Compliant 100Base-BX SFP Transceiver (SMF, 1310nmTx/1550nmRx, 10km, SC, DOM)

Product Description

This MSA compliant SFP transceiver provides 100Base-BX throughput up to 10km over single-mode fiber (SMF) using a wavelength of 1310nmTx/1550nmRx via an SC connector. This bidirectional unit must be used with another transceiver or network appliance of complementing wavelengths. It can operate at temperatures between 0 and 70C. All of our transceivers are built to comply with Multi-Source Agreement (MSA) standards and are uniquely serialized and tested for data-traffic and application to ensure seamless network integration. Additional product features include Digital Optical Monitoring (DOM) support which allows access to real-time operating parameters. We stand behind the quality of our products and proudly offer a limited lifetime warranty.

Skylane's transceivers are RoHS compliant and lead-free.

Features:

- Single-Mode Bi-Directional Transmission
- Hot-Pluggable
- SC Receptacle
- Single 3.3V Power Supply
- Excellent EMI and ESD Protection
- Up to 155Mbps Data Links
- Operating Temperature: 0 to 70 Celsius
- Laser Eye Safety Compliant
- Excellent ESD Protection
- RoHS Compliant and Lead-Free
- RoHS Compliant and Lead Free

Applications:

- 100Base Ethernet

For your product safety, please read the following information carefully before any manipulation of the transceiver:

ESD

This transceiver is specified as ESD threshold 1kV for SFI pins and 2kV for all others electrical input pins, tested per MIL-STD-883G, Method 3015.4 /JESD22-A114-A (HBM). However, normal ESD precautions are still required during the handling of this module.

LASER SAFETY

This is a Class1 Laser Product according to IEC 60825-1:2007. This product complies with 21 CFR 1040.10 and 1040.11 except for deviations pursuant to Laser Notice No. 50, dated (June 24, 2007).

The optical ports of the module need to be terminated with an optical connector or with a dust plug in order to avoid contamination.

Absolute Maximum Ratings

Parameter	Symbol	Min.	Typ.	Max.	Unit	Notes
Data Rate	DR		155		Mbps	
Storage Temperature	Tstg	-40		85	℃	
Operating Temperature	Tc	0		70	℃	
Input Voltage	Vcc	0		5	V	

Electrical Characteristics

Parameter		Symbol	Min.	Typ.	Max.	Unit	Notes
Power Supply Voltage		Vcc	3.0	3.3	3.6	V	
Power Supply Current		Icc		200	250	mA	
Transmitter							
Transmitter Differential Input Voltage		+/-TX_DAT	200		2400	mVp-p	
Tx_Disable Input Voltage	**Low**	VIL	0		0.8	V	
	High	VIH	2.0		Vcc	V	
Tx_Fault Output Voltage	**Low**	VOL	0		0.8	V	
	High	VOH	2.0		Vcc	V	
Receiver							
Receiver Differential Output Voltage		+/-RX_DAT	600		1400	mVp-p	
Rx_LOS Output Voltage	**Low**	VOL	0		0.8	V	
	High	VOH	2.0		Vcc	V	

Optical Characteristics

Parameter		Symbol	Min.	Typ.	Max.	Unit	Notes
Transmitter							
Center Wavelength		λc	1260	1310	1360	nm	
Output Spectral Width		△λ (RMS)			5	nm	
Average Output Power		P_O	-14		-5	dBm	
Extinction Ratio		ER	9			dB	
Data Input Voltage	**High**	V_{IHS}	Vcc-1.16		Vcc-0.89	V	
	Low	V_{ILS}	Vcc-1.82		Vcc-1.48	V	
Supply Current		Icc		90	110	mA	
Output Optical Eye		Compliant with ITU-T G.957					
Receiver							
Receive Sensitivity		P_{min}			-33	dBm	
Maximum Input Power		P_{max}	-3			dBm	
Signal Detection - Asserted		P_{H-L}	-40			dBm	
Signal Detection - De-Asserted		P_{L-H}			-34	dBm	
Output Voltage	**High**	VOH	Vcc-1.03		Vcc-0.89	V	
	Low	VOL	Vcc-1.82		Vcc-1.63	V	
Operating Wavelength		λC	1480	1550	1580	nm	
Supply Current		Icc		80	110	mA	

Pin Descriptions

Pin	Symbol	Name/Description	Plug Sequence	Notes
1	VeeT	Transmitter Ground.	1	
2	Tx_Fault	Transmitter Fault Indication.	3	1
3	Tx_Dis	Transmitter Disable. Module disables on “high” or “open.”	3	2
4	MOD_DEF (2)	SDA Serial Data Signal. 2-Wire Serial ID Interface.	3	3
5	MOD_DEF (1)	SCL Serial Clock Signal. 2-Wire Serial ID Interface.	3	3
6	MOD_DEF (0)	TTL Low. Grounded within the module.	3	3
7	Rate Select	Select between full or reduced receiver bandwidth. No connection required. “Low” = open-reduced bandwidth. “High” = full bandwidth.	3	
8	LOS	Loss of Signal Indication. “Logic 0” indicates normal operation.	3	5
9	VeeR	Receiver Ground.	1	6
10	VeeR	Receiver Ground.	1	6
11	VeeR	Receiver Ground.	1	6
12	RX-	Receiver Data Bar. Differential PECL. AC coupled.	3	7
13	RX+	Receiver Data. Differential PECL. AC coupled.	3	7
14	VeeR	Receiver Ground.	1	6
15	VccR	Receiver Power. 3.3V+5%.	2	8
16	VccT	Transmitter Power. 3.3V+5%.	2	8
17	VeeT	Transmitter Ground.	1	6
18	TX+	Receiver Data. Differential PECL. AC coupled.	3	9
19	TX-	Receiver Data Bar. Differential PECL. AC coupled.	3	9
20	VeeT	Transmitter Ground.	1	6

Notes:

1. Tx_Fault is an open collector/drain output that should be pulled up with a 4.7kΩ to 10kΩ resistor on the host board. Pull-up voltage between 2.0V and VccT/R+0.3V. When “high,” output indicates a laser fault of some kind. “Low” indicates normal operation. In the “low” state, the output will be pulled to <0.8V.
2. Tx_Disable is an input that is used to shut down the transmitter optical output. It is pulled up within the module with a 4.7kΩ to 10kΩ resistor. Its states are:
   Low (0V to 0.8V): Transmitter On
   (>0.8V, <2.0V): Undefined
   High (2.0V to 3.465V): Transmitter Disabled
   Open: Transmitter Disabled.
3. MOD_DEF0, 1, & 2. These are the module definition pins. They should be pulled up with a 4.7kΩ to 10kΩ resistor on the host board. The pull-up voltage shall be VccT or VccR.
   MOD_DEF0 is grounded by the module to indicate that the module is present.
   MOD_DEF1 is the clock line of the 2-wire serial interface for serial ID.
   MOD_DEF2 is the data line of the 2-wire serial interface for serial ID.
4. This is an optional input used to control the receiver bandwidth for compatibility with multiple data rates (most likely Fibre Channel 1x and 2x rates). If implemented, the input will be internally pulled down with >30k resistor. The input states are:
   Low (0V to 0.8V): Reduced Bandwidth
   (>0.8V, <2.0V): Undefined
   High (2.0V to 3.465V): Full Bandwidth

Open: Reduced Bandwidth.

5. LOS (Loss of Signal) is an open collector/drain output that should be pulled up with a 4.7kΩ to 10kΩ resistor. Pull-up voltage between 2.0V and VccT/R+0.3V. When “high,” this output indicates that the received optical power is below the worst-case receiver sensitivity (as defined by the standard in use). “Low” indicates normal operation. In the “low” state, the output will be pulled to <0.8V.
6. VeeR and VeeT may be internally connected within the SFP module.
7. RD-/+. These are the differential receiver outputs. They are AC-coupled, 100 differential lines that should be terminated with 100 (differential) at the user SERDES. The AC coupling is done inside the module and is thus not required on the host board. The voltage swing on these lines will be between 370mV and 2000mV differential (185mV to 1000mV single-ended) when properly terminated.
8. VccR and VccT are the receiver and transmitter power supplies. They are defined as 3.3V±5% at the SFP connector pin. Maximum supply current is 300mA. Recommended host board power supply filtering is shown below. Inductors with DC resistance of less than 1Ω should be used in order to maintain the required voltage at the SFP input pin with 3.3V supply voltage. When the recommended supply-filtering network is used, hot-plugging of the SFP transceiver module will result in an in-rush current of no more than 30mA greater than the steady state value. VccR and VccT may be internally connected within the SFP transceiver module.
9. TD-/+. These are the differential transmitter inputs. They are AC-coupled, differential lines with 100 differential terminations inside the module. The AC coupling is done inside the module and is thus not required on the host board. The inputs will accept differential swings of 500mV to 2400mV (250mV to 1200mV single-ended), though it is recommended that values between 500mV and 1200mV differential (250mV to 600mV single-ended) be used for best EMI performance.

Pin-Out Details

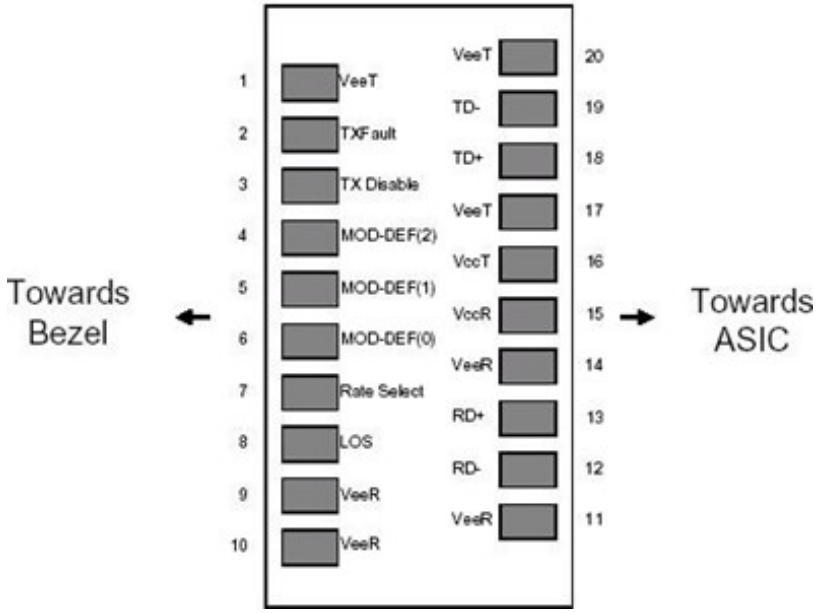

Block Diagram of Transceiver

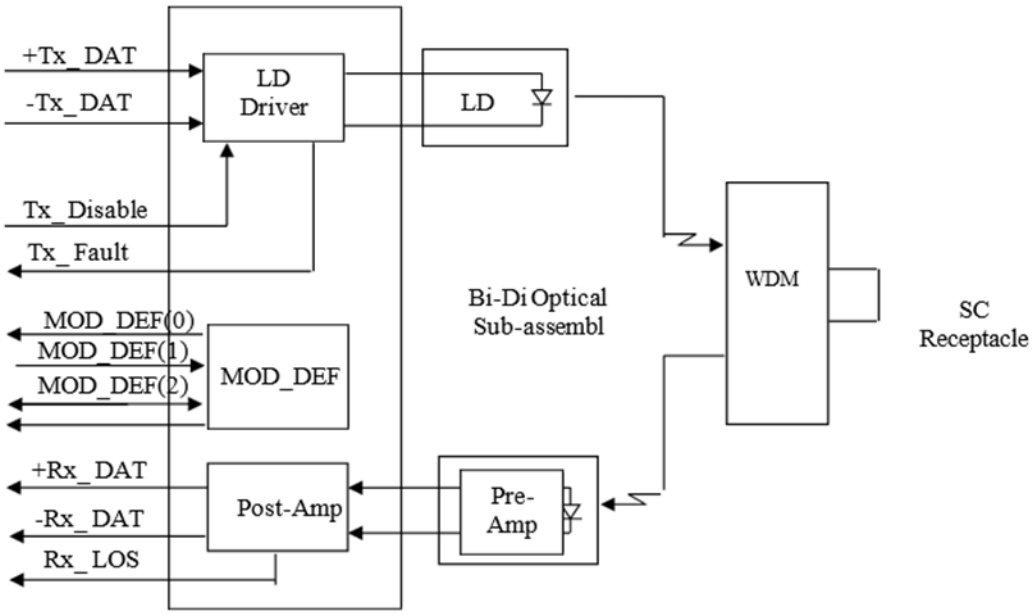

Recommended Circuit

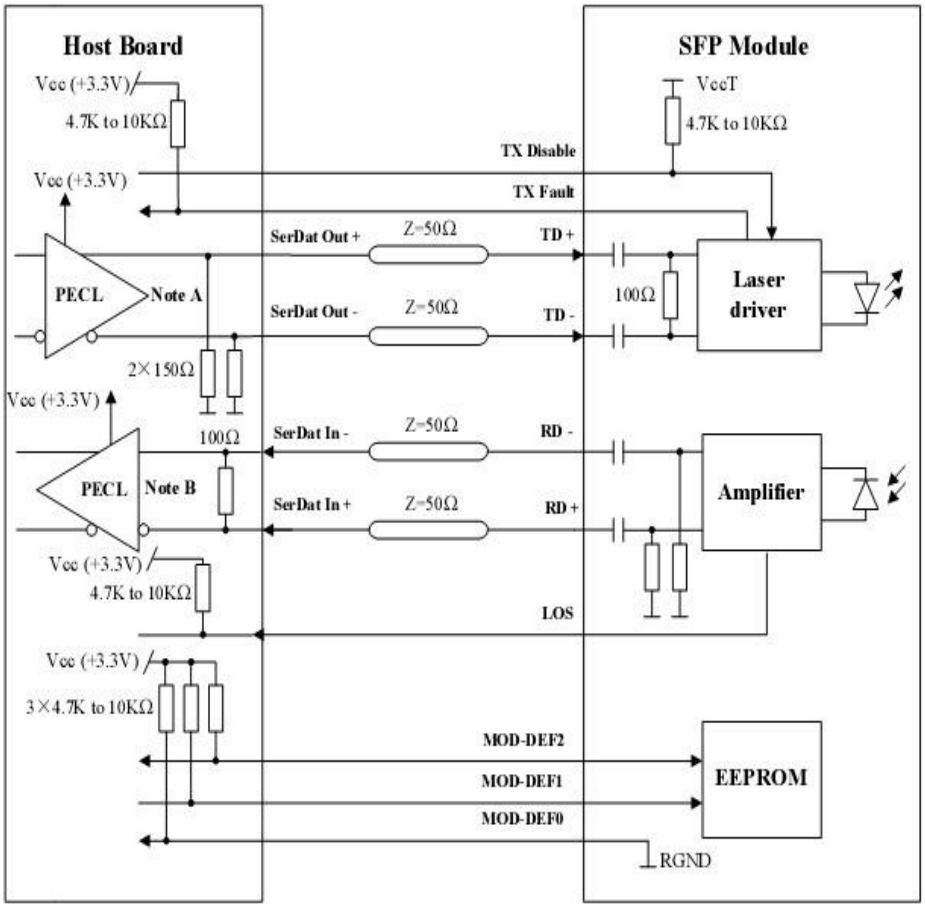

Note A: Circuit assumes open emitter output

Note B: Circuit assumes high impedance internal bias @Vcc-1.3V

Mechanical Specifications

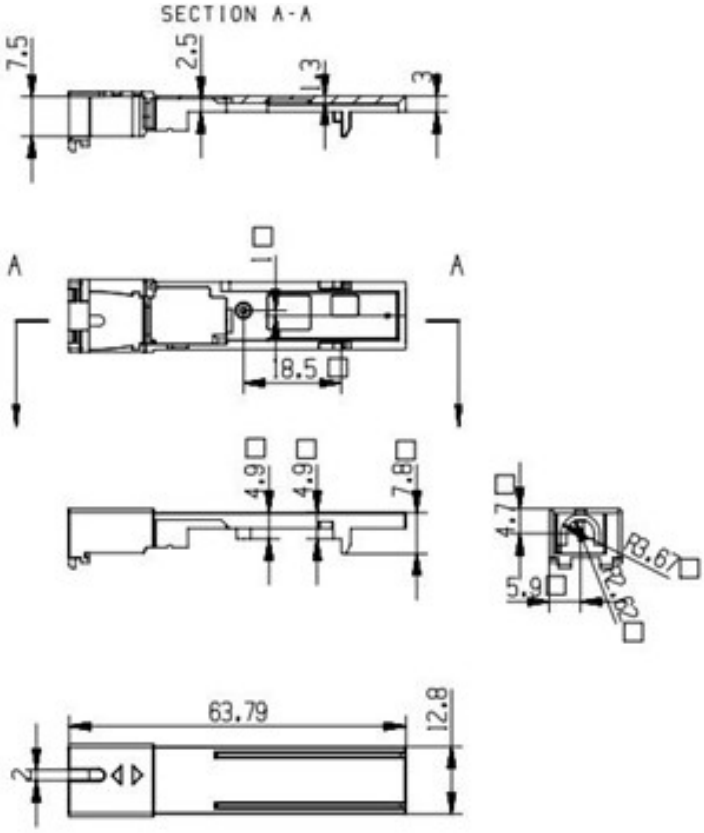

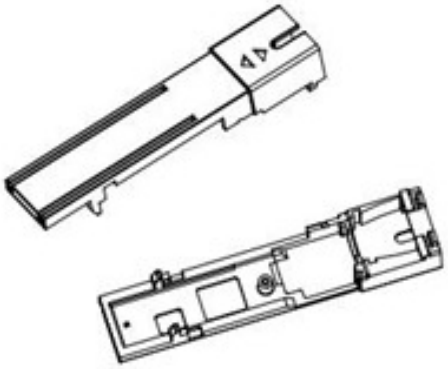

About Skylane Optics

Skylane is a leading provider of transceivers for optical communication.

We offer an extensive portfolio for the enterprise, access, datacenter and metropolitan fiber optical market as well as for smart home applications and home networks.

We cover the European, South American and North American market with a strong partner network and have offices in Belgium, Brazil, Sweden and USA.

Our offerings are characterized by high quality and performance. In combination with our strong technical support, we enable our customers to build cost optimized network solutions.

We offer an extensive range of high-quality products including transceivers (Optical and copper), Active Optical Cable (AOC), Direct Attach Cable (DAC), Mux/Demux, Coding Box.