S2C33010250FC4E

Juniper Networks® Compatible 25GBase-CWDM SFP28 Transceiver (SMF, 1330nm, 10km, LC, DOM)

Product Description

This Juniper Networks® compatible SFP28 transceiver provides 25GBase-CWDM throughput up to 10km over single-mode fiber (SMF) using a wavelength of 1330nm via an LC connector. It can operate at temperatures between 0 and 70C. Our transceiver is built to meet or exceed OEM specifications and is guaranteed to be 100% compatible with Juniper Networks®. It has been programmed, uniquely serialized, and tested for data-traffic and application to ensure that it will initialize and perform identically. All of our transceivers comply with Multi-Source Agreement (MSA) standards to provide seamless network integration. Additional product features include Digital Optical Monitoring (DOM) support which allows access to real-time operating parameters. We stand behind the quality of our products and proudly offer a limited lifetime warranty.

Skylane's transceivers are RoHS compliant and lead-free.

Features:

- SFF-8432 and SFF-8472 Compliance
- Duplex LC Connector
- Commercial Temperature 0 to 70 Celsius
- Single-mode Fiber
- Hot Pluggable
- Excellent ESD Protection
- Metal with Lower EMI
- RoHS Compliant and Lead Free

Applications:

- 25x Gigabit Ethernet over CWDM
- Access, Metro and Enterprise
- Mobile Fronthaul CPRI/OBSAI

For your product safety, please read the following information carefully before any manipulation of the transceiver:

ESD
This transceiver is specified as ESD threshold 1kV for SFI pins and 2kV for all others electrical input pins, tested per MIL-STD-883G, Method 3015.4 /JESD22-A114-A (HBM). However, normal ESD precautions are still required during the handling of this module.

LASER SAFETY
This is a Class1 Laser Product according to IEC 60825-1:2007. This product complies with 21 CFR 1040.10 and 1040.11 except for deviations pursuant to Laser Notice No. 50, dated (June 24, 2007).

The optical ports of the module need to be terminated with an optical connector or with a dust plug in order to avoid contamination.

Regulatory Compliance

- ESD to the Electrical PINs: compatible with MIL-STD-883E Method 3015.4
- ESD to the LC Receptacle: compatible with IEC 61000-4-3
- EMI/EMC compatible with FCC Part 15 Subpart B Rules, EN55022:2010
- Laser Eye Safety compatible with FDA 21CFR, EN60950-1& EN (IEC) 60825-1,2
- RoHS compliant with EU RoHS 2.0 directive 2015/863/EU

Absolute Maximum Ratings

Parameter	Symbol	Min.	Typ.	Max.	Unit	Notes
Maximum Supply Voltage	Vcc	-0.5		4.0	V	1
Storage Temperature	Tstg	-40		85	°C	2
Operating Case Temperature	Tc	0		70	°C	3
Data Rate	DR		24.3	26.5	Gb/s	4
Bit Error Rate	BER			5×10^{-5}		5

Notes:

1. For Electrical power interface.
2. Ambient Temperature.
3. Case Temperature.
4. IEEE 802.3cc.
5. Measured with data rate at 25.78GBps, PRBS $2^{31} – 1$.

Electrical Characteristics

Parameter	Symbol	Min.	Typ.	Max.	Unit	Notes
Power Supply Voltage	Vcc	3.14	3.3	3.46	V	
Module Supply Current	Icc		220	450	mA	1
Transmitter						
Input Differential Impedance	RIN		100		Ω	
Differential Data Input Swing	VIN, pp	250		900	mV	
Transmit Disable Voltage	Vd	2		Vcc	V	
Transmit Enable Voltage	Ven	Vee		Vee+0.8	V	
Receiver						
Differential Data Output Swing	Vout_pp	300		850	mV	
LOS Assert	Vlos_a	2		Vcc_host	V	
LOS De-Assert	Vlos_d	Vee		Vee+0.8	V	

Notes:

1. For electrical power interface.

Optical Characteristics

Parameter	Symbol	Min.	Typ.	Max.	Unit	Notes
Transmitter						
Output Optical Power	Ptx	2	4.5	7	dBm	1
Optical Center Wavelength	λc	λc – 6.5	λc	λc + 6.5	nm	2
Transmitter and Dispersion Penalty	TDP			2.7	dB	
Extinction Ratio	ER	3.5			dB	
Spectral Width(-20dB)	Δλ			1	nm	
Side Mode Suppression Ratio	SMSR	30			dB	
Transmitter Reflectance				12	dB	
Launch Power of OFF Transmitter	Pout_off			-30	dBm	1
Receiver						
Optical Center Wavelength	λc	1260		1390	nm	
Receive Overload	PoI	2			dBm	
Receiver Sensitivity (OMA)@ 25.78 Gbps	Rx_sen			-13.3	dBm	3
Receiver Reflectance	TRrx			-26	dB	
LOS Assert	LOSA	-30			dBm	
LOS De-Assert	LOSD			-14	dBm	
LOS Hysteresis	LOSH	0.5			dB	

Notes:

1. Average.
2. λc = 1271, 1291, 1311, 1331, 1351, 1371.
3. Average optical power, measured with data rate at 25.78Gbps, PRBS $2^{31} – 1$.

Pin Descriptions

Pin	Symbol	Name/Descriptions	Notes
1	VeeT	Transmitter Ground. Common with receiver ground.	1
2	TX_Fault	Transmitter Fault.	2
3	TX_Disable	Transmitter Disable. Laser output disables on high or open.	3
4	SDA	Two wire serial interface Data Line.	4
5	SCL	Two wire serial interface Clock Line.	4
6	MOD_ABS	Module Absent. Grounded within the module.	4
7	RS0	No connection required.	
8	LOS	Loss of signal indication. Logic 0 indicated normal operation.	5
9	RS1	No connection required.	1
10	VeeR	Receiver Ground. Common with transmitter ground.	1
11	VeeR	Receiver Ground. Common with transmitter ground.	1
12	RD-	Receiver Inverted DATA out. AC coupled.	
13	RD+	Receiver Non-Inverted DATA out. AC coupled.	
14	VeeR	Receiver Ground. Common with transmitter ground.	1
15	VccR	Receiver power supply.	
16	VccT	Transmitter power supply.	
17	VeeT	Transmitter ground. Common with receiver ground.	1
18	TD+	Transmitter Non-Inverted Data in. AC coupled.	
19	TD-	Transmitter Inverted Data in. AC coupled.	
20	VeeT	Transmitter Ground. Common with receiver ground.	1

Notes:

1. Circuit ground is isolated from chassis ground.
2. TX_Fault is the open collector output and should be pulled up with 4.7kΩ-10kΩ on host board to a voltage between 2V and Vcc+0.3V.
3. Disables: T_{DIS}>2V or open, Enabled T_{DIS}<0.8V.
4. Should be puled up with 4.7kΩ-10kΩ on host board to a voltage between 2V and Vcc+0.3V.
5. LOS is open collector output and should be pulled up with 4.7kΩ-10kΩ on host board to a voltage between 2V and Vcc0.3V, the logic “0” indicated normal operation, and the logic “1” indicates that the receiver signal is lost.

Block Diagram of Transceiver

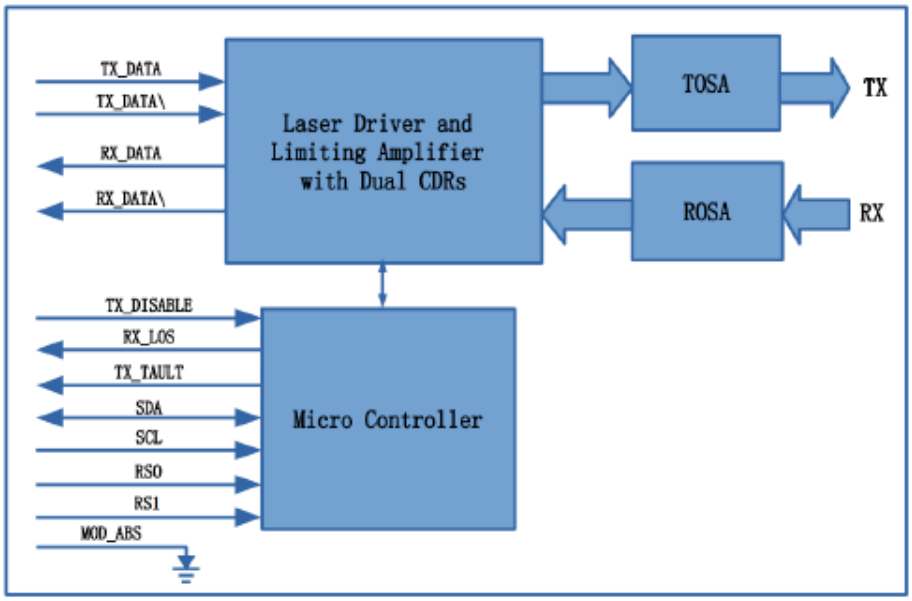

Electrical Pad Layout

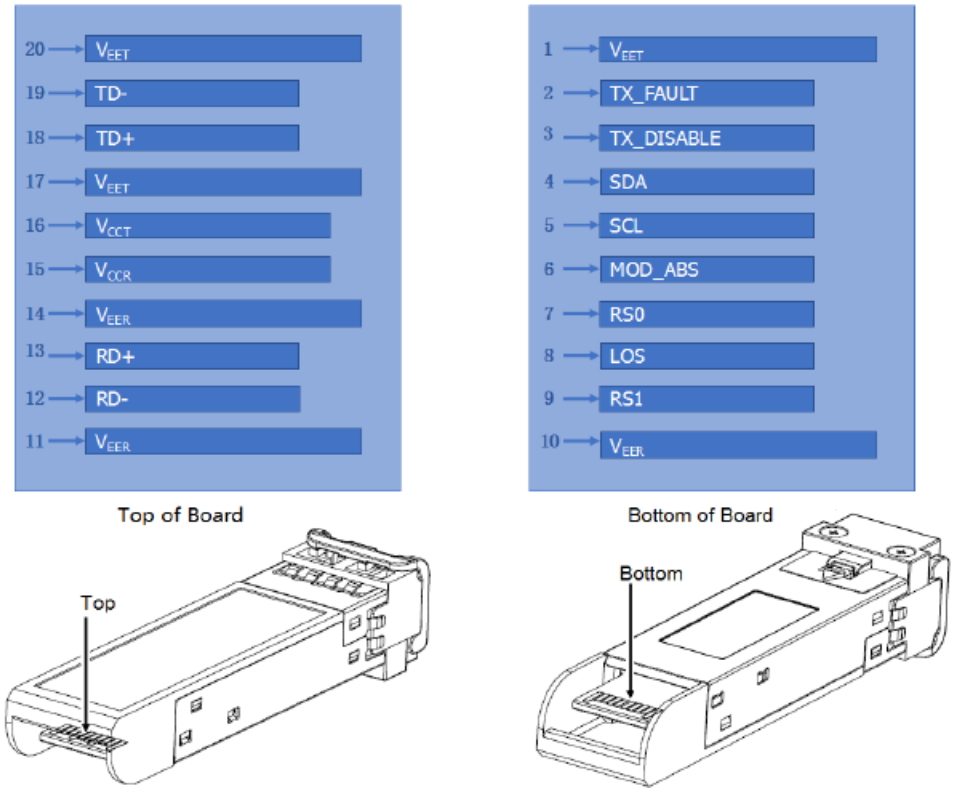

Mechanical Specifications

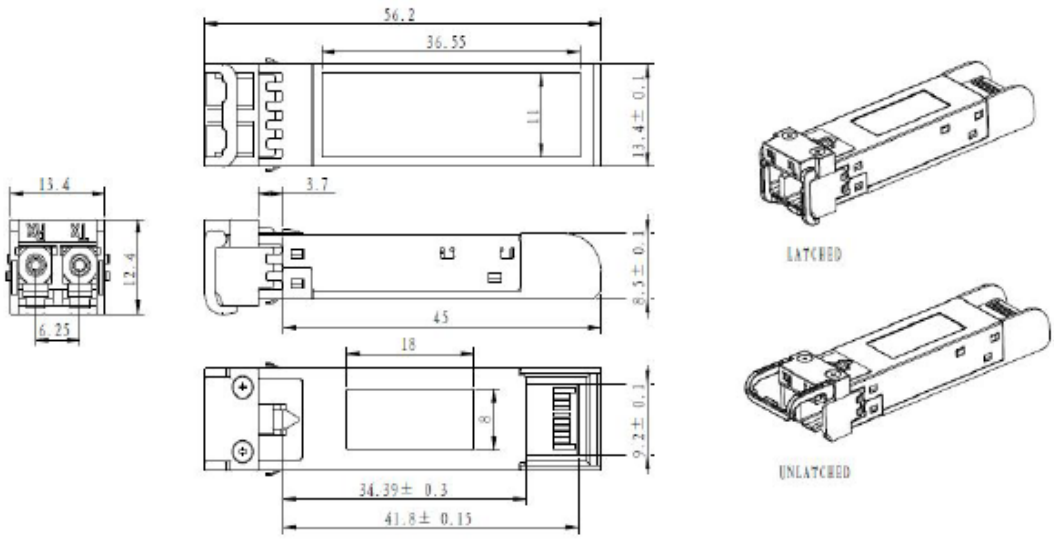

Typical Eye Diagram

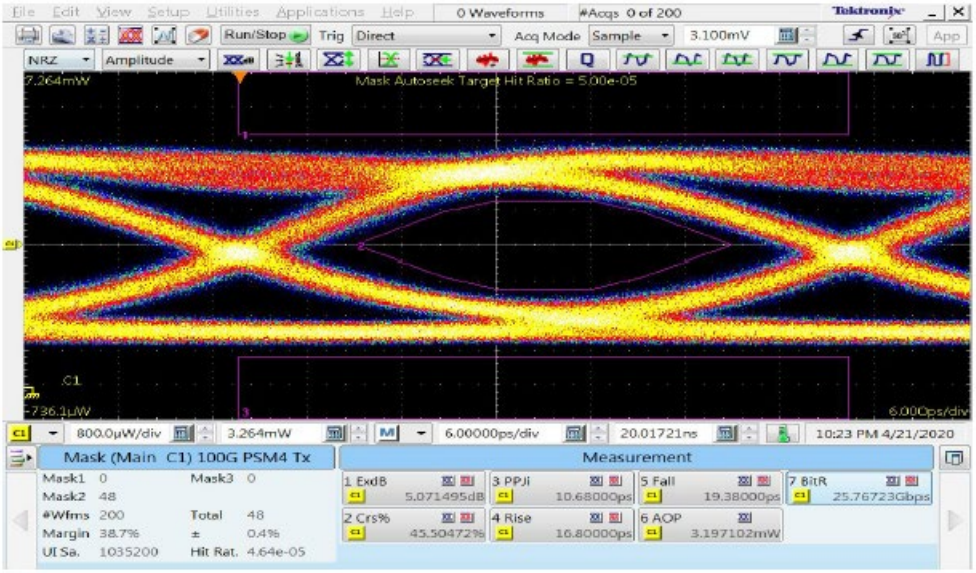

About Skylane Optics

Skylane is a leading provider of transceivers for optical communication.

We offer an extensive portfolio for the enterprise, access, datacenter and metropolitan fiber optical market as well as for smart home applications and home networks.

We cover the European, South American and North American market with a strong partner network and have offices in Belgium, Brazil, Sweden and USA.

Our offerings are characterized by high quality and performance. In combination with our strong technical support, we enable our customers to build cost optimized network solutions.

We offer an extensive range of high-quality products including transceivers (Optical and copper), Active Optical Cable (AOC), Direct Attach Cable (DAC), Mux/Demux, Coding Box.