QSFPDD4-400GB-AOC20M-MX-SKY

Mellanox® Compatible 400GBase-AOC QSFP-DD to QSFP-DD Active Optical Cable (850nm, MMF, 20m)

Product Description

This is a Mellanox® compatible 400GBase-AOC QSFP-DD to QSFP-DD active optical cable that operates over multi-mode fiber with a maximum reach of 20.0m (65.6ft). At a wavelength of 850nm, it has been programmed, uniquely serialized, and data-traffic and application tested to ensure it is 100% compliant and functional. This active optical cable is built to comply with MSA (Multi-Source Agreement) standards. We stand behind the quality of our products and proudly offer a limited lifetime warranty.

Skylane's transceivers are RoHS compliant and lead-free.

Features:

- Compliant to QSFP-DD MSA Standards
- Compliant to IEEE802.3bs
- 8 Parallel Full-Duplex Channels
- Operating Temperature: 0 to 70 Celsius
- 8x53.125Gbps Electrical Interface (400GAUI-8)
- Up to 100m OM3 MMF Transmission
- Maximum Power Consumption: 10.5W
- Data Rate 53.125Gbps (PAM4) Per Channel
- RoHS Compliant and Lead-Free

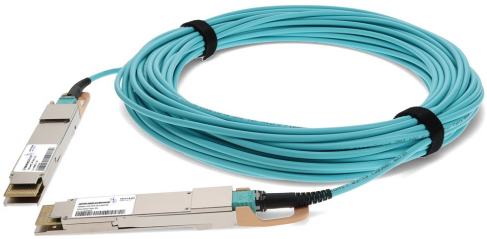

Applications:

- 400GBase Ethernet

For your product safety, please read the following information carefully before any manipulation of the transceiver:

ESD

This transceiver is specified as ESD threshold 1kV for SFI pins and 2kV for all others electrical input pins, tested per MIL-STD-883G, Method 3015.4 /JESD22-A114-A (HBM). However, normal ESD precautions are still required during the handling of this module.

LASER SAFETY

This is a Class1 Laser Product according to IEC 60825-1:2007. This product complies with 21 CFR 1040.10 and 1040.11 except for deviations pursuant to Laser Notice No. 50, dated (June 24, 2007).

The optical ports of the module need to be terminated with an optical connector or with a dust plug in order to avoid contamination.

General Specifications

Parameter	Symbol	Min.	Typ.	Max.	Unit	Notes
Storage Temperature	Tstg	-40		85	°C	
Operating Case Temperature	Tc	0		70	°C	
Supply Voltage	Vcc	-0.5		3.6	V	
Relative Operating Humidity	RH	0		85	%	
Data Rate Per Lane			26.5625			PAM4
Data Rate Accuracy		-100		100	ppm	
Link Distance with OM3	D	0.5		100	M	1

Notes:

1. FEC is required on the host system to support the maximum distance.

Electrical Specifications

Parameter	Symbol	Min.	Typ.	Max.	Unit	Notes
Power Supply Voltage	Vcc	3.135	3.3	3.465	V	
Pre-FEC Bit Error Ratio				2.4×10^{-4}		
Post-FEC Bit Error Ratio				1×10^{-12}		1
Power Consumption				10.5	W	
Supply Current	Icc			3.18	A	
Transmitter						
Signaling Rate Per Lane	TP1	26.5625 ± 100ppm			GBd	
Differential Pk-Pk Input Voltage Tolerance	TP1a	900			mVp-p	2
Differential Termination Mismatch	TP1			10	%	
Differential Input Return Loss	TP1	IEEE 802.3-2015 Equation (83E-5)			dB	
Differential to Common-Mode Input Return Loss	TP1	IEEE 802.3-2015 Equation (83E-6)			dB	
Module Stressed Input Test	TP1a	See IEEE 802.3bs 120E.3.4.1				3
Single-Ended Voltage Tolerance Range (Minimum)	TP1a	-0.4 to 3.3			V	
DC Common-Mode Input Voltage	TP1	-350		2850	mV	4
Receiver						
Signaling Rate Per Lane	TP4	26.5625 ± 100ppm			GBd	
Differential Pk-Pk Output Voltage	TP4			900	mVp-p	
AC Common-Mode Output Voltage (RMS)	TP4			17.5	mV	
Differential Termination Mismatch	TP4			10	%	
Differential Output Return Loss	TP4	IEEE 802.3-2015 Equation (83E-2)				
Common- to Differential-Mode Conversion Return Loss	TP4	IEEE 802.3-2015 Equation (83E-3)				
Transition Time (20-80%)	TP4	9.5			ps	
Near-End Eye Symmetry Mask Width (ESMW)	TP4		0.265		UI	
Near-End Eye Height (Differential)	TP4	70			mV	
Far-End Eye Symmetry Mask Width (ESMW)	TP4		0.2		UI	
Far-End Eye Height (Differential)	TP4	30			mV	
Far-End Pre-Cursor ISI Ratio	TP4	-4.5		2.5	%	
Common-Mode Output Voltage (Vcm)	TP4	-350		2850	mV	4

Notes:

1. FEC is provided by the host system.
2. With the exception to IEEE 802.3bs 120E.3.1.2 that the pattern is PRBS31Q or scrambled idle.
3. Meets BER specified in IEEE 802.3bs 120E.1.1.
4. DC common-mode voltage generated by the host. Specification includes effects of ground offset voltage.

Pin Descriptions

Pin	Logic	Symbol	Name/Description	Plug Sequence	Notes
1		GND	Module Ground.	1B	
2	CML-I	Tx2-	Transmitter Inverted Data Input.	3B	
3	CML-I	Tx2+	Transmitter Non-Inverted Data Input.	3B	
4		GND	Module Ground.	1B	
5	CML-I	Tx4-	Transmitter Inverted Data Input.	3B	
6	CML-I	Tx4+	Transmitter Non-Inverted Data Input.	3B	
7		GND	Module Ground.	1B	
8	LVTTL-I	ModSelL	Module Select.	3B	
9	LVTTL-I	ResetL	Module Reset.	3B	
10		VccRx	+3.3V Receiver Power Supply.	2B	
11	LVCMOS-I/O	SCL	2-Wire Serial Interface Clock.	3B	
12	LVCMOS-I/O	SDA	2-Wire Serial Interface Data.	3B	
13		GND	Module Ground.	1B	
14	CML-O	Rx3+	Receiver Non-Inverted Data Output.	3B	
15	CML-O	Rx3-	Receiver Inverted Data Output.	3B	
16		GND	Module Ground.	1B	
17	CML-O	Rx1+	Receiver Non-Inverted Data Output.	3B	
18	CML-O	Rx1-	Receiver Inverted Data Output.	3B	
19		GND	Module Ground.	1B	
20		GND	Module Ground.	1B	
21	CML-O	Rx2-	Receiver Inverted Data Output.	3B	
22	CML-O	Rx2+	Receiver Non-Inverted Data Output.	3B	
23		GND	Module Ground.	1B	
24	CML-O	Rx4-	Receiver Inverted Data Output.	3B	
25	CML-O	Rx4+	Receiver Non-Inverted Data Output.	3B	
26		GND	Module Ground.	1B	
27	LVTTL-O	ModPrsL	Module Present.	3B	
28	LVTTL-O	IntL	Interrupt.	3B	
29		VccTx	+3.3V Transmitter Power Supply.	2B	
30		Vcc1	+3.3V Power Supply.	2B	
31	LVTTL-I	InitMode	Initialization Mode. In legacy QSFP applications, the InitMode pad is called LPMODE.	3B	
32		GND	Module Ground.	1B	
33	CML-I	Tx3+	Transmitter Non-Inverted Data Input.	3B	
34	CML-I	Tx3-	Transmitter Inverted Data Input.	3B	
35		GND	Module Ground.	1B	
36	CML-I	Tx1+	Transmitter Non-Inverted Data Input.	3B	
37	CML-I	Tx1-	Transmitter Inverted Data Input.	3B	
38		GND	Module Ground.	1B	
39		GND	Module Ground.	1A	
40	CML-I	Tx6-	Transmitter Inverted Data Input.	3A	

41	CML-I	Tx6+	Transmitter Non-Inverted Data Input.	3A	
42		GND	Module Ground.	1A	
43	CML-I	Tx8-	Transmitter Inverted Data Input.	3A	
44	CML-I	Tx8+	Transmitter Non-Inverted Data Input.	3A	
45		GND	Module Ground.	1A	
46		Reserved	For Future Use.	3A	
47		VS1	Module Vendor-Specific 1.	3A	
48		VccRx1	+3.3V Receiver Power Supply.	2A	
49		VS2	Module Vendor-Specific 2.	3A	
50		VS3	Module Vendor-Specific 3.	3A	
51		GND	Module Ground.	1A	
52	CML-O	Rx7+	Receiver Non-Inverted Data Output.	3A	
53	CML-O	Rx7-	Receiver Inverted Data Output.	3A	
54		GND	Module Ground.	1A	
55	CML-O	Rx5+	Receiver Non-Inverted Data Output.	3A	
56	CML-O	Rx5-	Receiver Inverted Data Output.	3A	
57		GND	Module Ground.	1A	
58		GND	Module Ground.	1A	
59	CML-O	Rx6-	Receiver Inverted Data Output.	3A	
60	CML-O	Rx6+	Receiver Non-Inverted Data Output.	3A	
61		GND	Module Ground.	1A	
62	CML-O	Rx8-	Receiver Inverted Data Output.	3A	
63	CML-O	Rx8+	Receiver Non-Inverted Data Output.	3A	
64		GND	Module Ground.	1A	
65		NC	Not Connected.	3A	
66		Reserved	For Future Use.	3A	
67		VccTx1	+3.3V Transmitter Power Supply.	2A	
68		Vcc2	+3.3V Power Supply.	2A	
69		Reserved	For Future Use.	3A	
70		GND	Module Ground.	1A	
71	CML-I	Tx7+	Transmitter Non-Inverted Data Input.	3A	
72	CML-I	Tx7-	Transmitter Inverted Data Input.	3A	
73		GND	Module Ground.	1A	
74	CML-I	Tx5+	Transmitter Non-Inverted Data Input.	3A	
75	CML-I	Tx5-	Transmitter Inverted Data Input.	3A	
76		GND	Module Ground.	1A	

Electrical Pin-Out Details

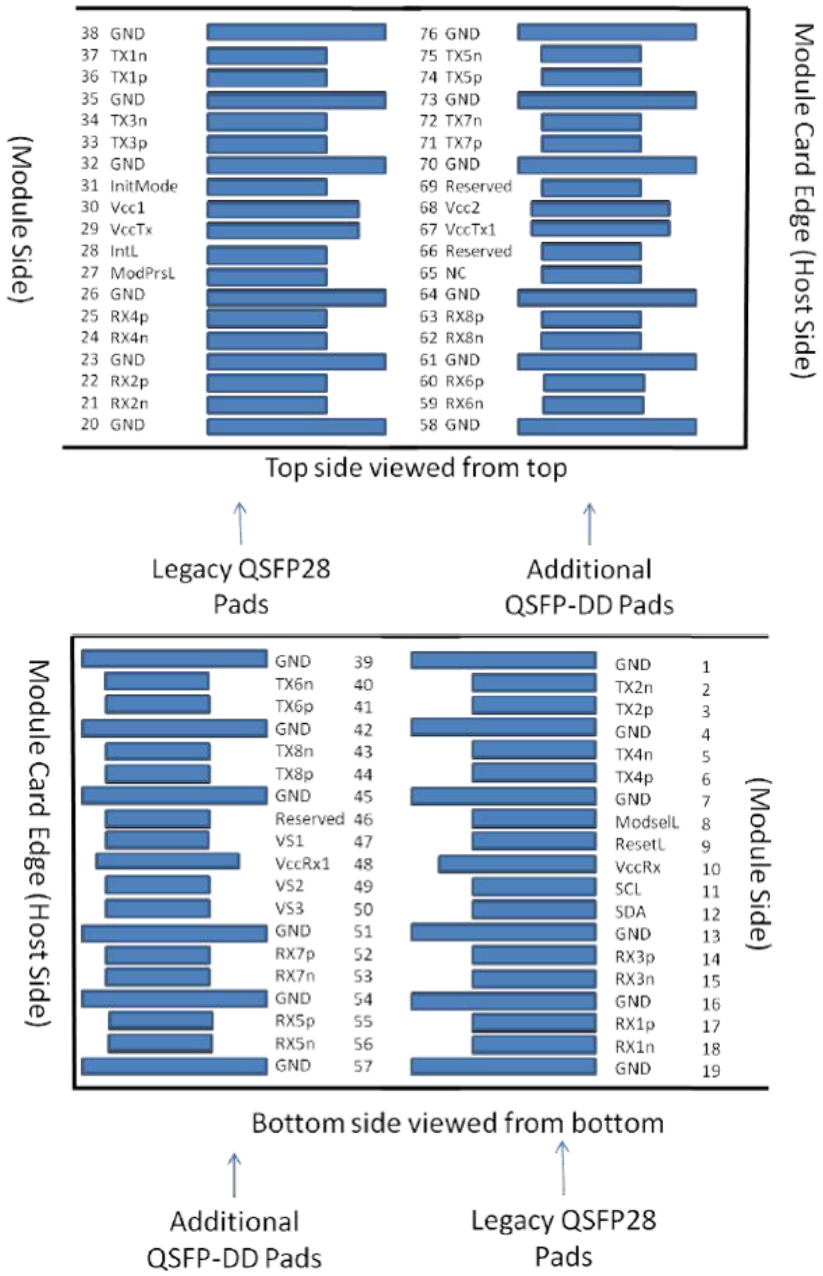

Recommended Power Supply Filter

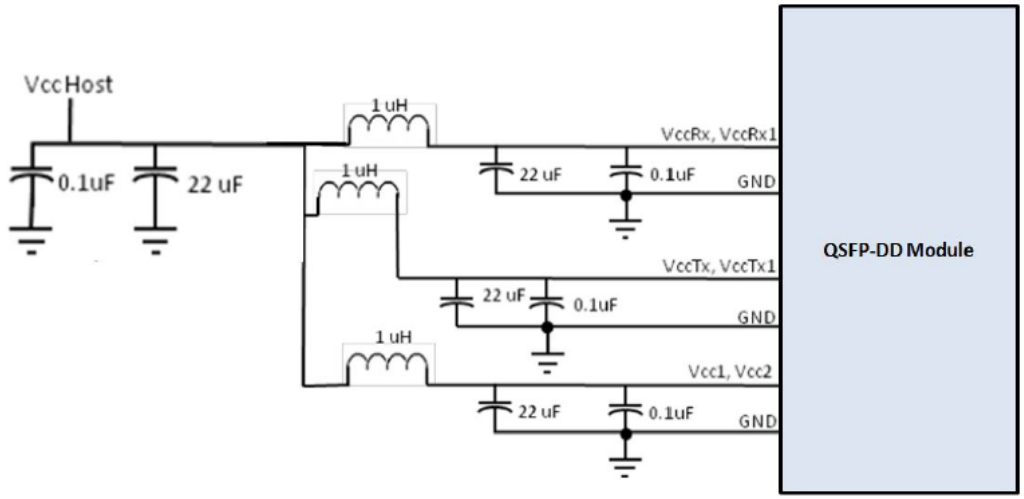

Block Diagram

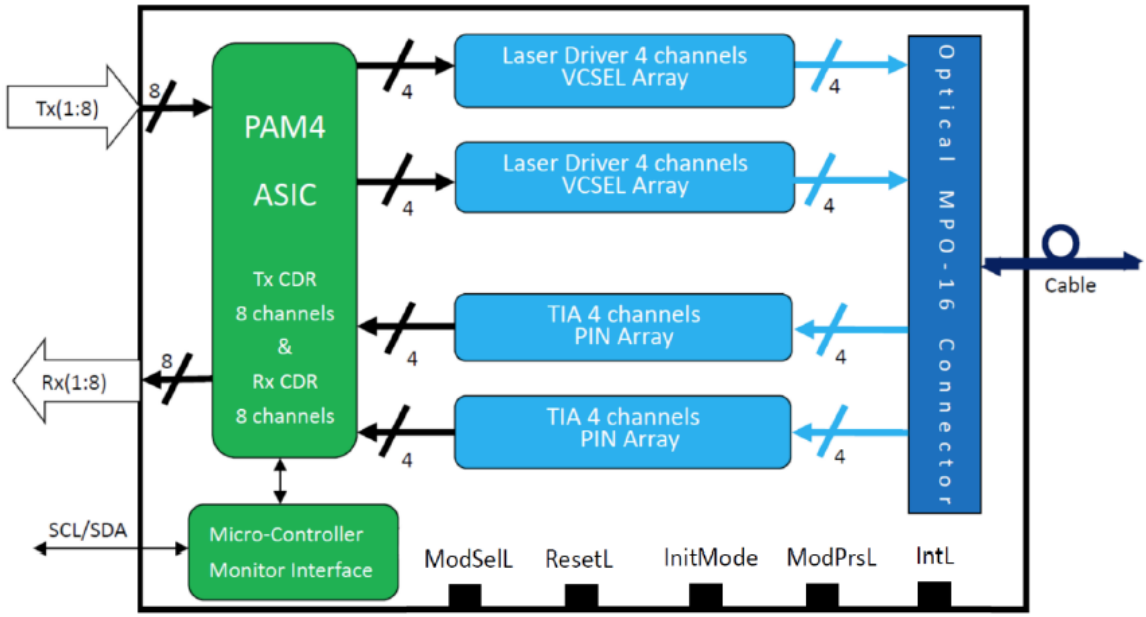

Mechanical Specifications

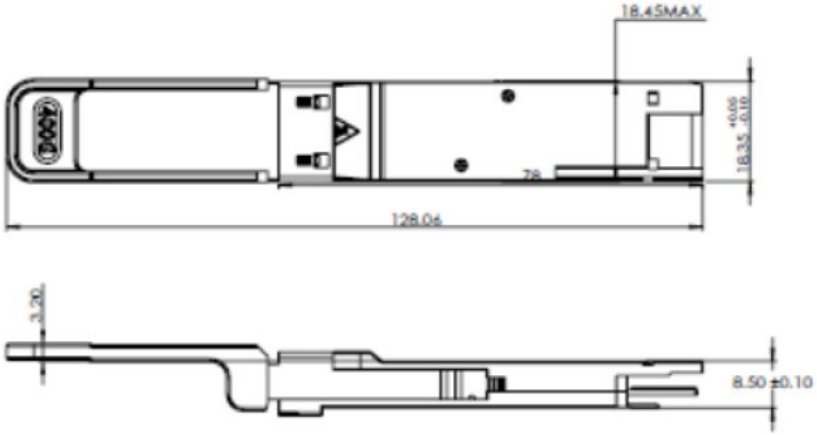

About Skylane Optics

Skylane is a leading provider of transceivers for optical communication.

We offer an extensive portfolio for the enterprise, access, datacenter and metropolitan fiber optical market as well as for smart home applications and home networks.

We cover the European, South American and North American market with a strong partner network and have offices in Belgium, Brazil, Sweden and USA.

Our offerings are characterized by high quality and performance. In combination with our strong technical support, we enable our customers to build cost optimized network solutions.

We offer an extensive range of high-quality products including transceivers (Optical and copper), Active Optical Cable (AOC), Direct Attach Cable (DAC), Mux/Demux, Coding Box.