# QSFP28-4SFP28-AOC20M-DE-SKY

Dell® Compatible 100GBase-AOC QSFP28 to 4xSFP28 Direct Attach Cable (850nm, MMF, 20m)

**Product Description**

This is a Dell® compatible 100GBase-AOC QSFP28 to 4xSFP28 direct attach cable that operates over multi-mode with a maximum reach of 20.0m (65.6ft). At a wavelength of 850nm, it has been programmed, uniquely serialized, and data-traffic and application tested to ensure it is 100% compliant and functional. We stand behind the quality of our products and proudly offer a limited lifetime warranty.

Skylane's transceivers are RoHS compliant and lead-free.

**Features:**

- QSFP28 and SFP28 MSA Compliant
- Supports 103.1Gbps Aggregate Bit Rate
- Four Independent Full-Duplex Channels
- 25G Electrical Interface (OIF CEI-28G-VSR) for SFP28 Terminal
- Maximum Power Consumption of 2.5W for QSFP28 Terminal and 1.0W for Each SFP28 Terminal
- 4x25G Electrical Interface (OIF CEI-28G-VSR) for QSFP28 Terminal
- Operating Temperature: 0 to 70 Celsius
- Single Power Supply of 3.3V
- RoHS Compliant and Lead-Free

**Applications:**

- 100GBase Ethernet

*For your product safety, please read the following information carefully before any manipulation of the transceiver:*

*ESD*

*This transceiver is specified as ESD threshold 1kV for SFI pins and 2kV for all others electrical input pins, tested per MIL-STD-883G, Method 3015.4 /JESD22-A114-A (HBM). However, normal ESD precautions are still required during the handling of this module.*

*LASER SAFETY*

*This is a Class1 Laser Product according to IEC 60825-1:2007. This product complies with 21 CFR 1040.10 and 1040.11 except for deviations pursuant to Laser Notice No. 50, dated (June 24, 2007).*

***The optical ports of the module need to be terminated with an optical connector or with a dust plug in order to avoid contamination.***

## Absolute Maximum Ratings

| Parameter | Symbol | Min. | Max. | Unit | Notes |
|---|---|---|---|---|---|
| **Storage Temperature** | Tstg | -40 | 85 | ˚C | |
| **Operating Case Temperature** | Tc | 0 | 70 | ˚C | |
| **Power Supply Voltage** | Vcc | -0.5 | 3.6 | V | |
| **Relative Humidity** | RH | 0 | 85 | % | 1 |
| **Data Rate Accuracy** | | -100 | | 100 | ppm |
| **Control Input Voltage - High** | | 2 | | Vcc | V |
| **Control Input Voltage - Low** | | 0 | | 0.8 | V |

**Notes:**

1. Non-condensing.

## QSFP28 Electrical Characteristics

| Parameter | Symbol / Test Point | Min. | Typ. | Max. | Unit | Notes |
|---|---|---|---|---|---|---|
| **Power Consumption** | | | | 2.5 | W | |
| **Data Rate Per Lane** | | | 25.781235 | | | |
| **Supply Current** | Icc | | | 757 | mA | |
| **Power Supply Voltage** | Vcc | 3.135 | 3.3 | 3.465 | | |
| **Transmitter** | | | | | | |
| **Overload Differential Voltage Pk-Pk** | TP1a | 900 | | | mV | |
| **Common-Mode Voltage (Vcm)** | TP1 | -350 | | 2850 | mV | 1 |
| **Differential Termination Resistance Mismatch** | TP1 | | | 10 | % | 2 |
| **Differential Return Loss (SDD11)** | TP1 | | | See CEI-28G-VSR Equation 13-19 | dB | |
| **Common-Mode to Differential Conversion and Differential to Common-Mode Conversion (SDC11, SCD11)** | TP1 | | | See CEI-28G-VSR Equation 13-20 | dB | |
| **Stressed Input Test** | TP1a | See CEI-28G-VSR Section 13.3.11.2.1 | | | | |
| **Receiver** | | | | | | |
| **Differential Voltage Pk-Pk** | TP4 | | | 900 | mV | |
| **Common-Mode Voltage (Vcm)** | TP4 | -350 | | 2850 | mV | 1 |
| **Common-Mode Noise (RMS)** | TP4 | | | 17.5 | mV | |
| **Differential Termination Resistance Mismatch** | TP4 | | | 10 | % | 2 |
| **Common-Mode to Differential Conversion and Differential to Common-Mode Conversion (SDC22, SCD22)** | TP4 | | | See CEI-28G-VSR Equation 13 | | |
| **Common-Mode Return Loss (SCC22)** | TP4 | | | -2 | dB | 3 |
| **Transition Time (20-80%)** | TP4 | 9.5 | | 5.5 | dB | |
| **Vertical Eye Closure (VEC)** | TP4 | | | 5.5 | dB | |
| **Eye Width at $10^{-15}$ Probability (EW15)** | TP4 | 0.57 | | | UI | |
| **Eye Width at $10^{-15}$ Probability (EH15)** | TP4 | 228 | | | mV | |

**Notes:**

1. Vcm is generated by the host. Specification includes the effects of ground offset voltage.
2. At 1MHz.
3. From 250MHz to 30GHz.

**SFP28 Electrical Characteristics**

| Parameter | Symbol / Test Point | Min. | Typ. | Max. | Unit | Notes |
|---|---|---|---|---|---|---|
| **Power Consumption** | | | | 1.0 | W | 1 |
| **Data Rate Per Lane** | | | 25.781235 | | | |
| **Supply Current** | Icc | | | 300 | mA | 1 |
| **Power Supply Voltage** | Vcc | 3.135 | 3.3 | 3.465 | | |
| **Transmitter** | | | | | | |
| **Overload Differential Voltage Pk-Pk** | TP1a | 900 | | | mV | |
| **Common-Mode Voltage (Vcm)** | TP1 | -350 | | 2850 | mV | 2 |
| **Differential Termination Resistance Mismatch** | TP1 | | | 10 | % | 3 |
| **Differential Return Loss (SDD11)** | TP1 | | | See CEI-28G-VSR Equation 13-19 | dB | |
| **Common-Mode to Differential Conversion and Differential to Common-Mode Conversion (SDC11, SCD11)** | TP1 | | | See CEI-28G-VSR Equation 13-20 | dB | |
| **Stressed Input Test** | TP1a | See CEI-28G-VSR Section 13.3.11.2.1 | | | | |
| **Receiver** | | | | | | |
| **Differential Voltage Pk-Pk** | TP4 | | | 900 | mV | |
| **Common-Mode Voltage (Vcm)** | TP4 | -350 | | 2850 | mV | 2 |
| **Common-Mode Noise (RMS)** | TP4 | | | 17.5 | mV | 3 |
| **Differential Termination Resistance Mismatch** | TP4 | | | 10 | % | |
| **Differential Return Loss (SDD22)** | TP4 | | | See CEI-28G-VSR Equation 13-19 | | |
| **Common-Mode to Differential Conversion and Differential to Common-Mode Conversion (SDC22, SCD22)** | TP4 | | | See CEI-28G-VSR Equation 13-21 | | |
| **Common-Mode Return Loss (SCC22)** | TP4 | | | -2 | dB | 4 |
| **Transition Time (20-80%)** | TP4 | 9.5 | | 5.5 | dB | |
| **Vertical Eye Closure (VEC)** | TP4 | | | 5.5 | dB | |
| **Eye Width at $10^{-15}$ Probability (EW15)** | TP4 | 0.57 | | | UI | |
| **Eye Width at $10^{-15}$ Probability (EH15)** | TP4 | 228 | | | mV | |

**Notes:**

1. Per terminal.
2. Vcm is generated by the host. Specification includes the effects of ground offset voltage.
3. At 1MHz.
4. From 250MHz to 30GHz.

**QSFP28 Pin Descriptions**

| Pin | Logic | Symbol | Name/Description | Notes |
|---|---|---|---|---|
| **1** | | GND | Module Ground. | 1 |
| **2** | CML-I | Tx2- | Transmitter Inverted Data Input. | |
| **3** | CML-I | Tx2+ | Transmitter Non-Inverted Data Output. | |
| **4** | | GND | Module Ground. | 1 |
| **5** | CML-I | Tx4- | Transmitter Inverted Data Input. | |
| **6** | CML-I | Tx4+ | Transmitter Non-Inverted Data Output. | |
| **7** | | GND | Module Ground. | 1 |
| **8** | LVTTL-I | ModSelL | Module Select. | |
| **9** | LVTTL-I | ResetL | Module Reset. | |
| **10** | | VccRx | +3.3V Receiver Power Supply. | 2 |
| **11** | LVCMOS-I/O | SCL | 2-Wire Serial Interface Clock. | |
| **12** | LVCMOS-I/O | SDA | 2-Wire Serial Interface Data. | |
| **13** | | GND | Module Ground. | |
| **14** | CML-O | Rx3+ | Receiver Non-Inverted Data Output. | |
| **15** | CML-O | Rx3- | Receiver Inverted Data Output. | |
| **16** | | GND | Module Ground. | 1 |
| **17** | CML-O | Rx1+ | Receiver Non-Inverted Data Output. | |
| **18** | CML-O | Rx1- | Receiver Inverted Data Output. | |
| **19** | | GND | Module Ground. | 1 |
| **20** | | GND | Module Ground. | 1 |
| **21** | CML-O | Rx2- | Receiver Inverted Data Output. | |
| **22** | CML-O | Rx2+ | Receiver Non-Inverted Data Output. | |
| **23** | | GND | Module Ground. | 1 |
| **24** | CML-O | Rx4- | Receiver Inverted Data Output. | 1 |
| **25** | CML-O | Rx4+ | Receiver Non-Inverted Data Output. | |
| **26** | | GND | Module Ground. | 1 |
| **27** | LVTTL-O | ModPrsL | Module Present. | |
| **28** | LVTTL-O | IntL | Interrupt. | |
| **29** | | VccTx | +3.3V Transmitter Power Supply. | 2 |
| **30** | | Vcc1 | +3.3V Power Supply. | 2 |
| **31** | LVTTL-I | LPMode | Low-Power Mode. | |
| **32** | | GND | Module Ground. | 1 |
| **33** | CML-I | Tx3+ | Transmitter Non-Inverted Data Input. | |
| **34** | CML-I | Tx3- | Transmitter Inverted Data Output. | |

| | | | | |
|---|---|---|---|---|
| **35** | | GND | Module Ground. | 1 |
| **36** | CML-I | Tx1+ | Transmitter Non-Inverted Data Input. | |
| **37** | CML-I | Tx1- | Transmitter Inverted Data Output. | |
| **38** | | GND | Module Ground. | 1 |

**Notes:**

1. GND is the symbol for signal and supply (power) common for QSFP28 modules. All are common within the QSFP28 module, and all module voltages are referenced to this potential unless otherwise noted. Connect these directly to the host board signal common ground plane.
2. VccRx, Vcc1, and VccTx are the receiving and transmission power supplies and shall be applied concurrently. Recommended host board power supply filtering is shown below. VccRx, Vcc1, and VccTx may be internally connected within the QSFP28 transceiver module in any combination. The connector pins are each rated for a maximum current of 1000mA.

**QSFP28 Connector**

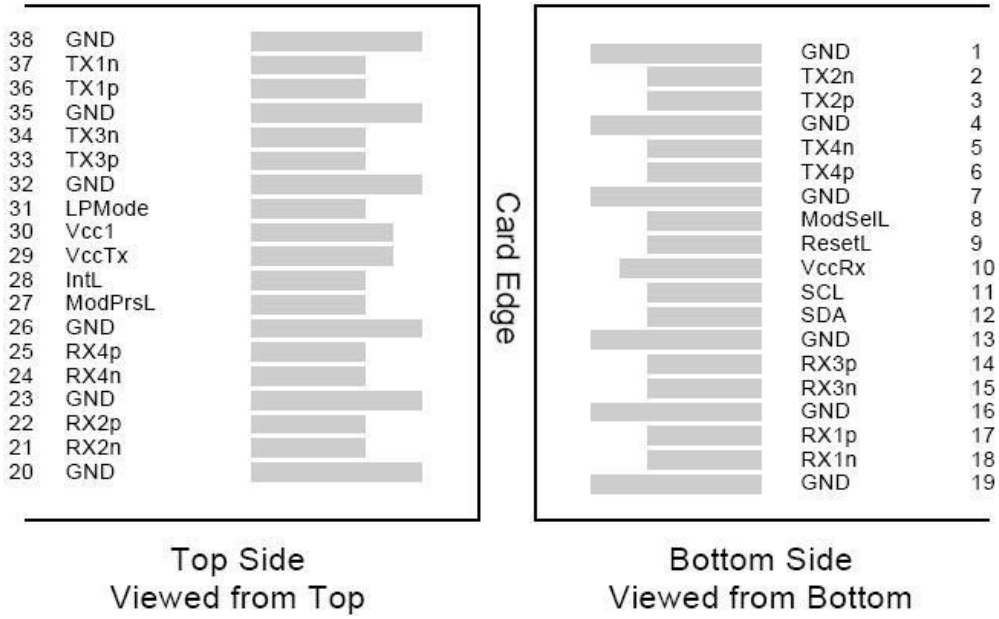

**SFP28 Pin Descriptions**

| Pin | Logic | Symbol | Name/Description | Notes |
|---|---|---|---|---|
| **1** | | VeeT | Module Transmitter Ground. | 1 |
| **2** | LVTTL-O | Tx_Fault | Module Transmitter Fault. | |
| **3** | LVTTL-I | Tx_Disable | Transmitter Disable. Turns off the transmitter's laser output. | |
| **4** | LVTTL-I/O | SDA | 2-Wire Serial Interface Data. | 2 |
| **5** | LVTTL-I | SCL | 2-Wire Serial Interface Clock. | 2 |
| **6** | | MOD_DEF0 | Module Definition 0. Grounded within the module. | |
| **7** | LVTTL-I | RS0 | Receiver Rate Select. | |
| **8** | LVTTL-O | Rx_LOS | Receiver Loss of Signal Indication. Active LOW. | |
| **9** | LVTTL-I | RS1 | Transmitter Rate Select. Not Used. | |
| **10** | | VeeR | Module Receiver Ground. | 1 |
| **11** | | VeeR | Module Receiver Ground. | 1 |
| **12** | CML-O | RD- | Receiver Inverted Data Output. | |
| **13** | CML-O | RD+ | Receiver Data Output. | |
| **14** | | VeeR | Module Receiver Ground. | 1 |
| **15** | | VccR | Module Receiver +3.3V Supply. | |
| **16** | | VccT | Module Receiver +3.3V Supply. | |
| **17** | | VeeT | Module Transmitter Ground. | 1 |
| **18** | CML-I | TD+ | Transmitter Non-Inverted Data Input. | |
| **19** | CML-I | TD- | Transmitter Inverted Data Input. | |
| **20** | | VeeT | Module Transmitter Ground. | 1 |

**Notes:**

1. Module ground pins (GND) are isolated from the module case.
2. Shall be pulled up with 4.7kΩ to 10kΩ to a voltage between 3.15V and 3.45V on the host board.

**SFP28 Module Interface**

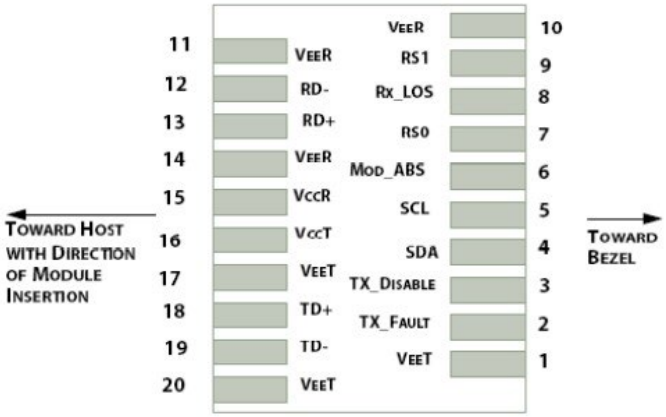

**SFP28 Module Contact Assignment**

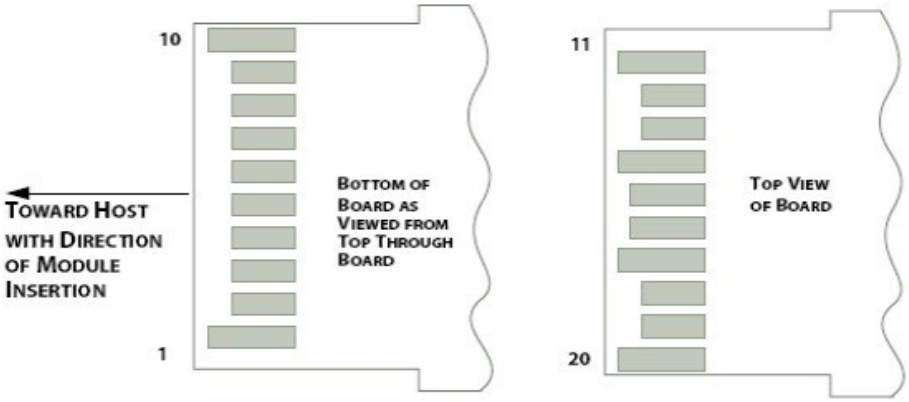


**QSFP28 Recommended Power Supply**

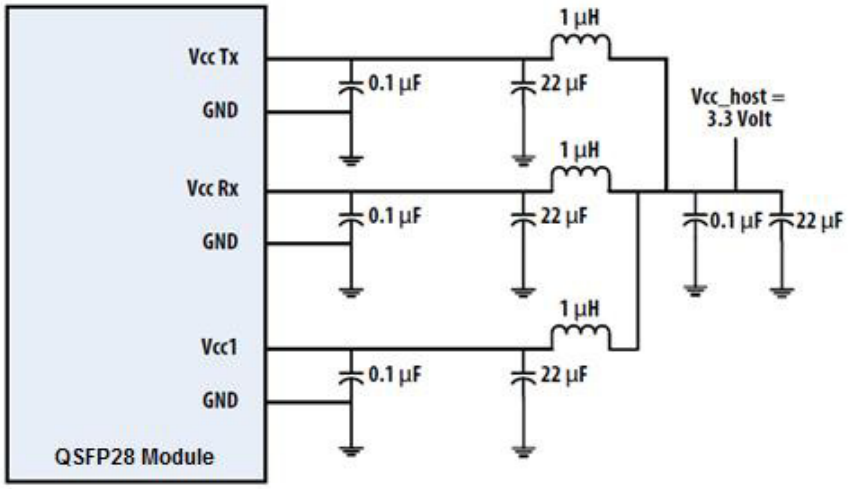


**SFP28 Recommended Power Supply**

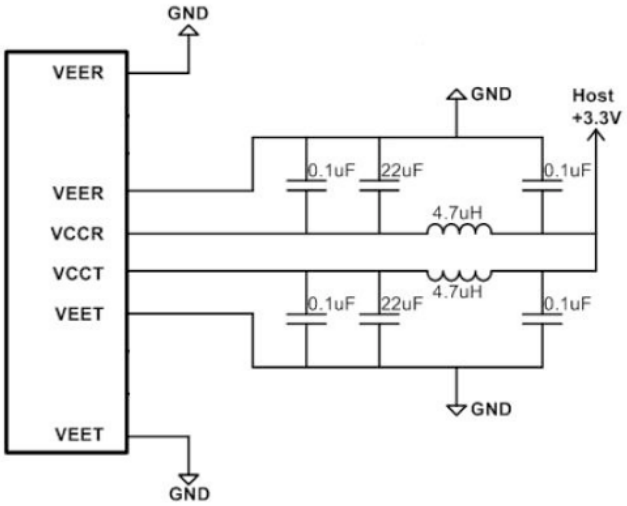

**QSFP28 Mechanical Specifications**

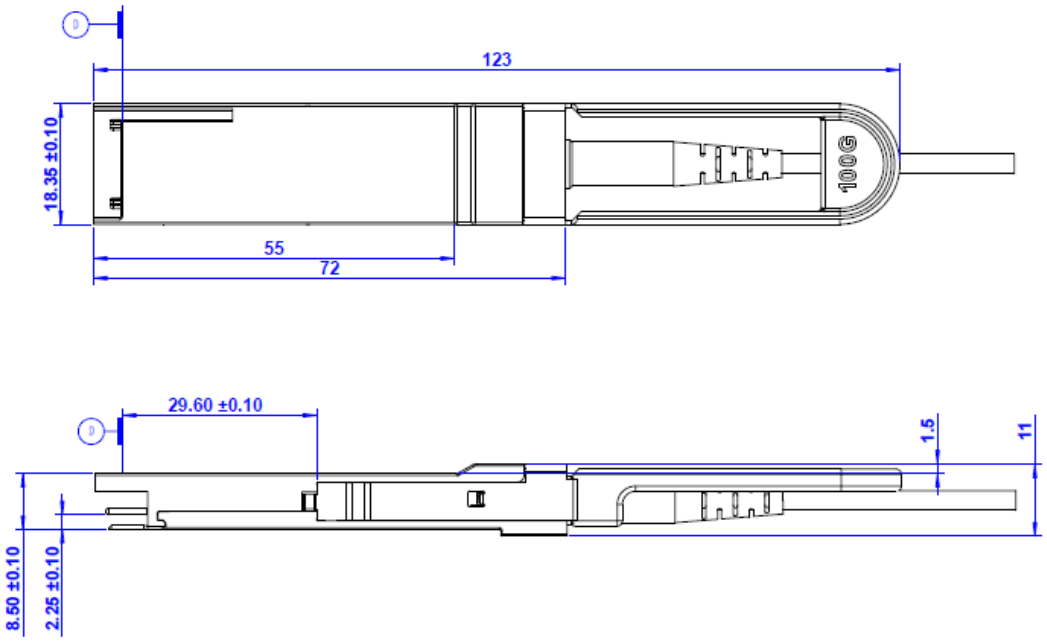


**SFP28 Mechanical Specifications**

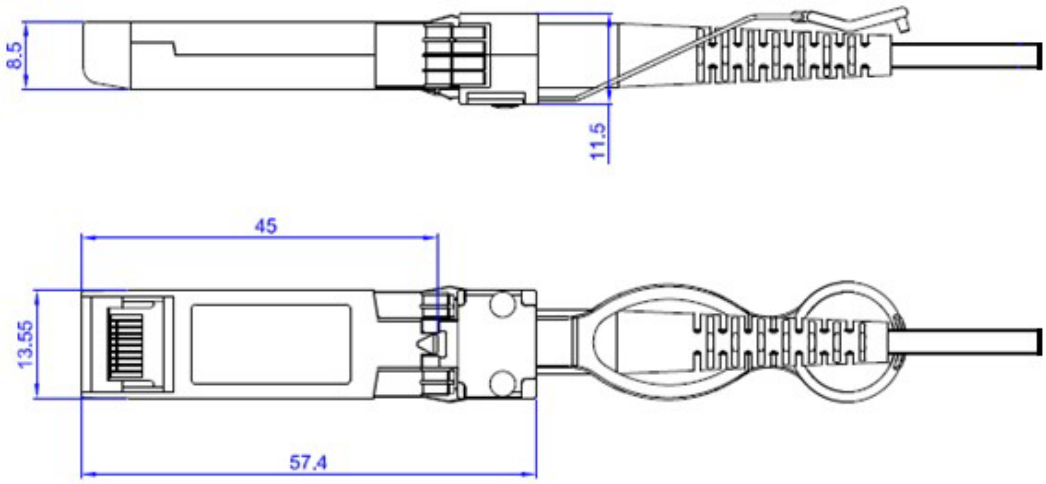

# About Skylane Optics

Skylane is a leading provider of transceivers for optical communication.

We offer an extensive portfolio for the enterprise, access, datacenter and metropolitan fiber optical market as well as for smart home applications and home networks.

We cover the European, South American and North American market with a strong partner network and have offices in Belgium, Brazil, Sweden and USA.

Our offerings are characterized by high quality and performance. In combination with our strong technical support, we enable our customers to build cost optimized network solutions.

We offer an extensive range of high-quality products including transceivers (Optical and copper), Active Optical Cable (AOC), Direct Attach Cable (DAC), Mux/Demux, Coding Box.