QSFP28-4SFP28-AOC2-5M-DE-SKY

Dell® Compatible 100GBase-AOC QSFP28 to 4xSFP28 Active Optical Cable (850nm, MMF, 2.5m)

Product Description

This is a Dell® compatible 100GBase-AOC QSFP28 to 4xSFP28 active optical cable that operates over multi-mode fiber with a maximum reach of 2.5m (8.2ft). At a wavelength of 850nm, it has been programmed, uniquely serialized, and data-traffic and application tested to ensure it is 100% compliant and functional. This active optical cable is built to comply with MSA (Multi-Source Agreement) standards. We stand behind the quality of our products and proudly offer a limited lifetime warranty.

Skylane's transceivers are RoHS compliant and lead-free.

Features:

- QSFP28 and SFP28 MSA Compliant
- Supports 103.1Gbps Aggregate Bit Rate
- Four Independent Full-Duplex Channels
- 25G Electrical Interface (OIF CEI-28G-VSR) for SFP28 Terminal
- Maximum Power Consumption of 2.5W for QSFP28 Terminal and 1.0W for Each SFP28 Terminal
- 4x25G Electrical Interface (OIF CEI-28G-VSR) for QSFP28 Terminal
- Operating Temperature: 0 to 70 Celsius
- Single Power Supply of 3.3V
- RoHS Compliant and Lead-Free

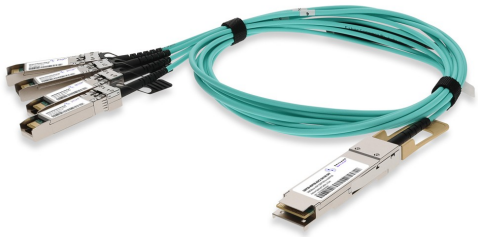

Applications:

- 100G Ethernet
- Infiniband EDR

For your product safety, please read the following information carefully before any manipulation of the transceiver:

ESD

This transceiver is specified as ESD threshold 1kV for SFI pins and 2kV for all others electrical input pins, tested per MIL-STD-883G, Method 3015.4 /JESD22-A114-A (HBM). However, normal ESD precautions are still required during the handling of this module.

LASER SAFETY

This is a Class1 Laser Product according to IEC 60825-1:2007. This product complies with 21 CFR 1040.10 and 1040.11 except for deviations pursuant to Laser Notice No. 50, dated (June 24, 2007).

The optical ports of the module need to be terminated with an optical connector or with a dust plug in order to avoid contamination.

Absolute Maximum Ratings

Parameter	Symbol	Min.	Max.	Unit	Notes
Storage Temperature	Tstg	-40	85	˚C	
Operating Case Temperature	Tc	0	70	˚C	
Power Supply Voltage	Vcc	-0.5	3.6	V	
Relative Humidity	RH	0	85	%	1
Data Rate Accuracy		-100		100	ppm
Control Input Voltage - High		2		Vcc	V
Control Input Voltage - Low		0		0.8	V

Notes:

1. Non-condensing.

QSFP28 Electrical Characteristics

Parameter	Symbol / Test Point	Min.	Typ.	Max.	Unit	Notes
Power Consumption				2.5	W	
Data Rate Per Lane			25.781235			
Supply Current	Icc			757	mA	
Power Supply Voltage	Vcc	3.135	3.3	3.465		
Transmitter						
Overload Differential Voltage Pk-Pk	TP1a	900			mV	
Common-Mode Voltage (Vcm)	TP1	-350		2850	mV	1
Differential Termination Resistance Mismatch	TP1			10	%	2
Differential Return Loss (SDD11)	TP1			See CEI-28G-VSR Equation 13-19	dB	
Common-Mode to Differential Conversion and Differential to Common-Mode Conversion (SDC11, SCD11)	TP1			See CEI-28G-VSR Equation 13-20	dB	
Stressed Input Test	TP1a	See CEI-28G-VSR Section 13.3.11.2.1				
Receiver						
Differential Voltage Pk-Pk	TP4			900	mV	
Common-Mode Voltage (Vcm)	TP4	-350		2850	mV	1
Common-Mode Noise (RMS)	TP4			17.5	mV	
Differential Termination Resistance Mismatch	TP4			10	%	2
Common-Mode to Differential Conversion and Differential to Common-Mode Conversion (SDC22, SCD22)	TP4			See CEI-28G-VSR Equation 13		
Common-Mode Return Loss (SCC22)	TP4			-2	dB	3
Transition Time (20-80%)	TP4	9.5		5.5	dB	
Vertical Eye Closure (VEC)	TP4			5.5	dB	
Eye Width at 10^{-15} Probability (EW15)	TP4	0.57			UI	
Eye Width at 10^{-15} Probability (EH15)	TP4	228			mV	

Notes:

1. Vcm is generated by the host. Specification includes the effects of ground offset voltage.
2. At 1MHz.
3. From 250MHz to 30GHz.

SFP28 Electrical Characteristics

Parameter	Symbol / Test Point	Min.	Typ.	Max.	Unit	Notes
Power Consumption				1.0	W	1
Data Rate Per Lane			25.781235			
Supply Current	Icc			300	mA	1
Power Supply Voltage	Vcc	3.135	3.3	3.465		
Transmitter						
Overload Differential Voltage Pk-Pk	TP1a	900			mV	
Common-Mode Voltage (Vcm)	TP1	-350		2850	mV	2
Differential Termination Resistance Mismatch	TP1			10	%	3
Differential Return Loss (SDD11)	TP1			See CEI-28G-VSR Equation 13-19	dB	
Common-Mode to Differential Conversion and Differential to Common-Mode Conversion (SDC11, SCD11)	TP1			See CEI-28G-VSR Equation 13-20	dB	
Stressed Input Test	TP1a	See CEI-28G-VSR Section 13.3.11.2.1				
Receiver						
Differential Voltage Pk-Pk	TP4			900	mV	
Common-Mode Voltage (Vcm)	TP4	-350		2850	mV	2
Common-Mode Noise (RMS)	TP4			17.5	mV	3
Differential Termination Resistance Mismatch	TP4			10	%	
Differential Return Loss (SDD22)	TP4			See CEI-28G-VSR Equation 13-19		
Common-Mode to Differential Conversion and Differential to Common-Mode Conversion (SDC22, SCD22)	TP4			See CEI-28G-VSR Equation 13-21		
Common-Mode Return Loss (SCC22)	TP4			-2	dB	4
Transition Time (20-80%)	TP4	9.5		5.5	dB	
Vertical Eye Closure (VEC)	TP4			5.5	dB	
Eye Width at 10^{-15} Probability (EW15)	TP4	0.57			UI	
Eye Width at 10^{-15} Probability (EH15)	TP4	228			mV	

Notes:

1. Per terminal.
2. Vcm is generated by the host. Specification includes the effects of ground offset voltage.
3. At 1MHz.
4. From 250MHz to 30GHz.

QSFP28 Pin Descriptions

Pin	Logic	Symbol	Name/Description	Notes
1		GND	Module Ground.	1
2	CML-I	Tx2-	Transmitter Inverted Data Input.	
3	CML-I	Tx2+	Transmitter Non-Inverted Data Output.	
4		GND	Module Ground.	1
5	CML-I	Tx4-	Transmitter Inverted Data Input.	
6	CML-I	Tx4+	Transmitter Non-Inverted Data Output.	
7		GND	Module Ground.	1
8	LVTTL-I	ModSelL	Module Select.	
9	LVTTL-I	ResetL	Module Reset.	
10		VccRx	+3.3V Receiver Power Supply.	2
11	LVCMOS-I/O	SCL	2-Wire Serial Interface Clock.	
12	LVCMOS-I/O	SDA	2-Wire Serial Interface Data.	
13		GND	Module Ground.	
14	CML-O	Rx3+	Receiver Non-Inverted Data Output.	
15	CML-O	Rx3-	Receiver Inverted Data Output.	
16		GND	Module Ground.	1
17	CML-O	Rx1+	Receiver Non-Inverted Data Output.	
18	CML-O	Rx1-	Receiver Inverted Data Output.	
19		GND	Module Ground.	1
20		GND	Module Ground.	1
21	CML-O	Rx2-	Receiver Inverted Data Output.	
22	CML-O	Rx2+	Receiver Non-Inverted Data Output.	
23		GND	Module Ground.	1
24	CML-O	Rx4-	Receiver Inverted Data Output.	1
25	CML-O	Rx4+	Receiver Non-Inverted Data Output.	
26		GND	Module Ground.	1
27	LVTTL-O	ModPrsL	Module Present.	
28	LVTTL-O	IntL	Interrupt.	
29		VccTx	+3.3V Transmitter Power Supply.	2
30		Vcc1	+3.3V Power Supply.	2
31	LVTTL-I	LPMode	Low-Power Mode.	
32		GND	Module Ground.	1
33	CML-I	Tx3+	Transmitter Non-Inverted Data Input.	
34	CML-I	Tx3-	Transmitter Inverted Data Output.	

35		GND	Module Ground.	1
36	CML-I	Tx1+	Transmitter Non-Inverted Data Input.	
37	CML-I	Tx1-	Transmitter Inverted Data Output.	
38		GND	Module Ground.	1

Notes:

1. GND is the symbol for signal and supply (power) common for QSFP28 modules. All are common within the QSFP28 module, and all module voltages are referenced to this potential unless otherwise noted. Connect these directly to the host board signal common ground plane.
2. VccRx, Vcc1, and VccTx are the receiving and transmission power supplies and shall be applied concurrently. Recommended host board power supply filtering is shown below. VccRx, Vcc1, and VccTx may be internally connected within the QSFP28 transceiver module in any combination. The connector pins are each rated for a maximum current of 1000mA.

QSFP28 Connector

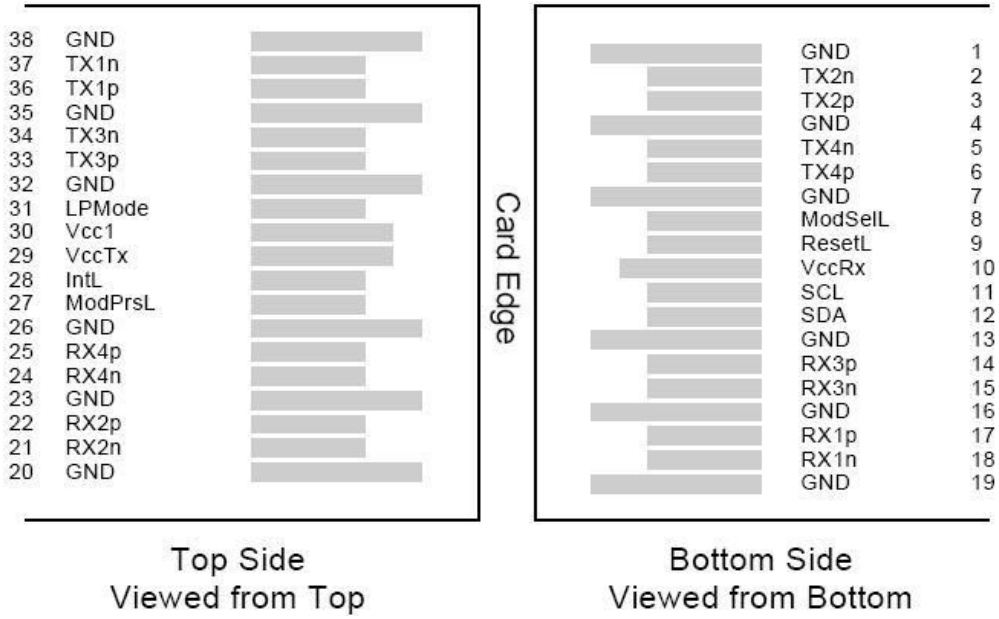

SFP28 Pin Descriptions

Pin	Logic	Symbol	Name/Description	Notes
1		VeeT	Module Transmitter Ground.	1
2	LVTTL-O	Tx_Fault	Module Transmitter Fault.	
3	LVTTL-I	Tx_Disable	Transmitter Disable. Turns off the transmitter's laser output.	
4	LVTTL-I/O	SDA	2-Wire Serial Interface Data.	2
5	LVTTL-I	SCL	2-Wire Serial Interface Clock.	2
6		MOD_DEF0	Module Definition 0. Grounded within the module.	
7	LVTTL-I	RS0	Receiver Rate Select.	
8	LVTTL-O	Rx_LOS	Receiver Loss of Signal Indication. Active LOW.	
9	LVTTL-I	RS1	Transmitter Rate Select. Not Used.	
10		VeeR	Module Receiver Ground.	1
11		VeeR	Module Receiver Ground.	1
12	CML-O	RD-	Receiver Inverted Data Output.	
13	CML-O	RD+	Receiver Data Output.	
14		VeeR	Module Receiver Ground.	1
15		VccR	Module Receiver +3.3V Supply.	
16		VccT	Module Receiver +3.3V Supply.	
17		VeeT	Module Transmitter Ground.	1
18	CML-I	TD+	Transmitter Non-Inverted Data Input.	
19	CML-I	TD-	Transmitter Inverted Data Input.	
20		VeeT	Module Transmitter Ground.	1

Notes:

1. Module ground pins (GND) are isolated from the module case.
2. Shall be pulled up with 4.7kΩ to 10kΩ to a voltage between 3.15V and 3.45V on the host board.

SFP28 Module Interface

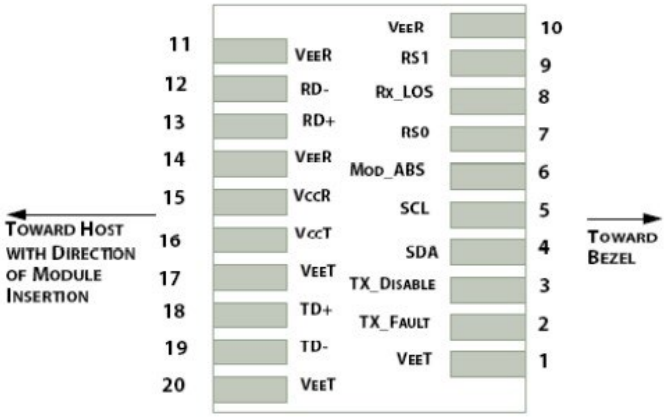

SFP28 Module Contact Assignment

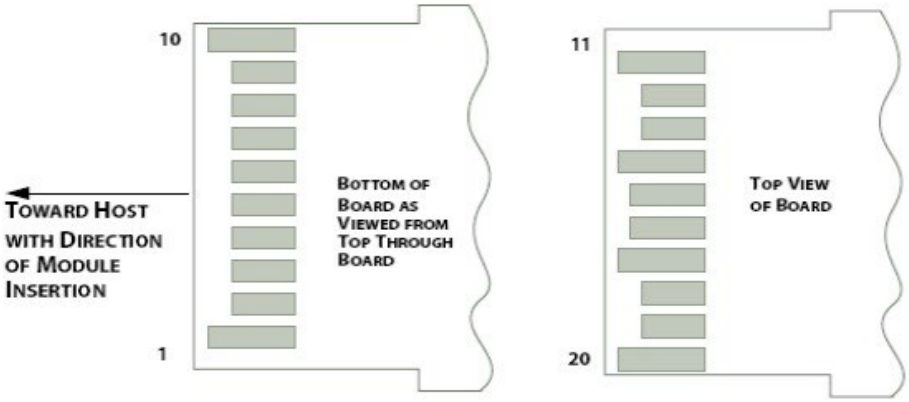

QSFP28 Recommended Power Supply

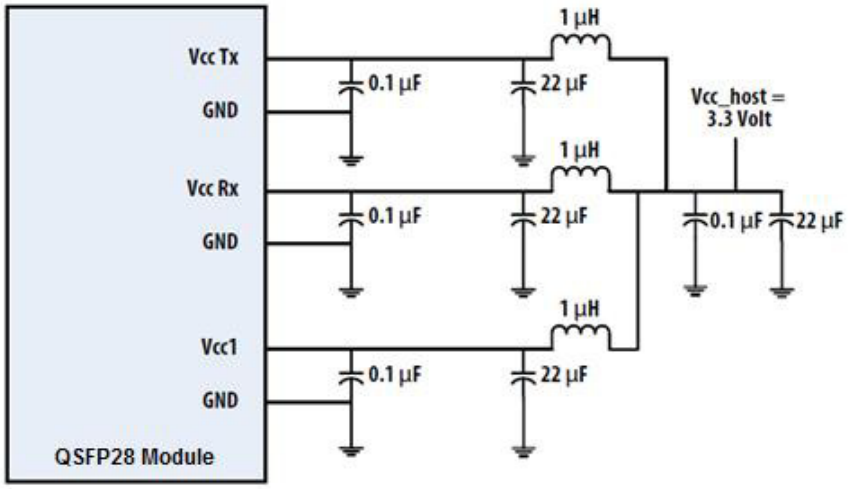

SFP28 Recommended Power Supply

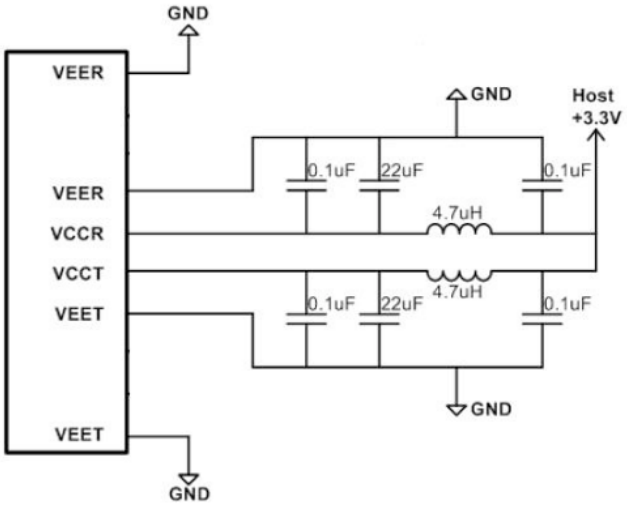

QSFP28 Mechanical Specifications

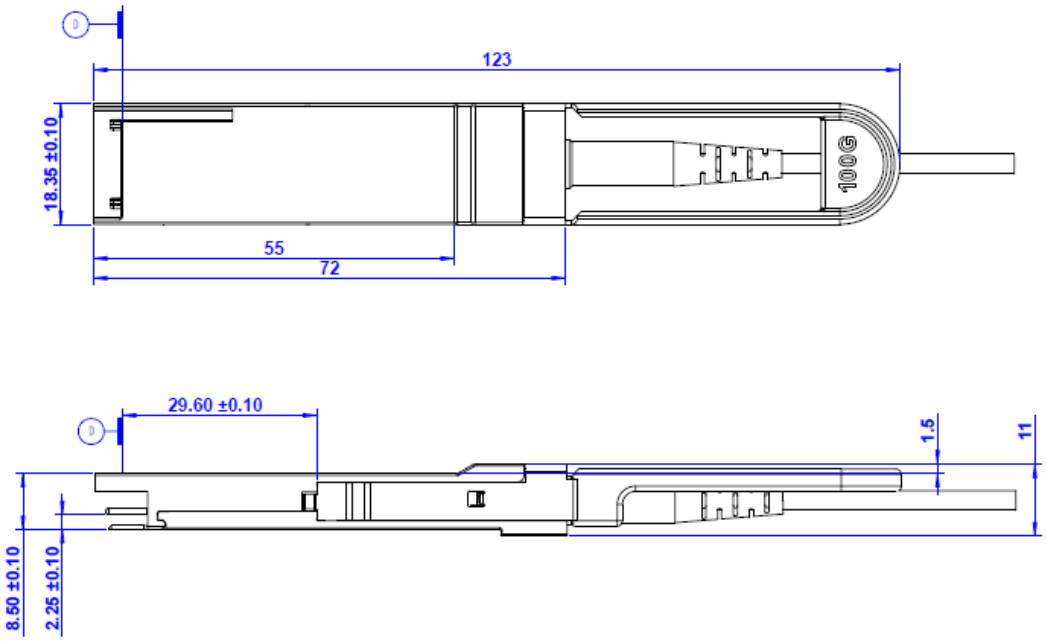

SFP28 Mechanical Specifications

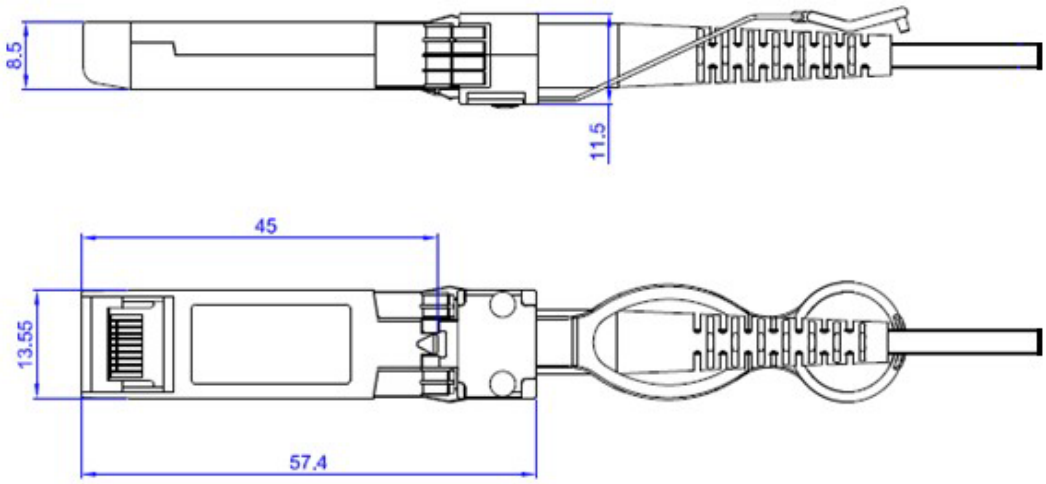

About Skylane Optics

Skylane is a leading provider of transceivers for optical communication.

We offer an extensive portfolio for the enterprise, access, datacenter and metropolitan fiber optical market as well as for smart home applications and home networks.

We cover the European, South American and North American market with a strong partner network and have offices in Belgium, Brazil, Sweden and USA.

Our offerings are characterized by high quality and performance. In combination with our strong technical support, we enable our customers to build cost optimized network solutions.

We offer an extensive range of high-quality products including transceivers (Optical and copper), Active Optical Cable (AOC), Direct Attach Cable (DAC), Mux/Demux, Coding Box.