QSFP-H40G-AOC25M-SKY

Cisco® Compatible 40GBase-AOC QSFP+ Active Optical Cable (850nm, MMF, 25m)

Product Description

This is a Cisco® compatible 40GBase-AOC QSFP+ to QSFP+ active optical cable that operates over multi-mode fiber with a maximum reach of 25.0m (82.0ft). At a wavelength of 850nm, it has been programmed, uniquely serialized, and data-traffic and application tested to ensure it is 100% compliant and functional. This active optical cable is built to comply with MSA (Multi-Source Agreement) standards. We stand behind the quality of our products and proudly offer a limited lifetime warranty.

Skylane's transceivers are RoHS compliant and lead-free.

Features:

- Support up to 4x10 Gbps bi-directional operation
- Compliant to the IEEE802.3ba
- SFF-8436 QSFP+ compliant
- Reliable VCSEL and PIN photonic devices
- I2C standard management interface
- Automatic power down while broken cable is detected to improve eye safety
- Low power consumption
- Excellent high speed signal integrity
- RoHS Compliant and Lead-Free
- Operating Case Temperature 0 to 70 Celsius

Applications:

- 10G/40GBase Ethernet
- High performance computing, server and data storage
- Proprietary high speed, high density data

For your product safety, please read the following information carefully before any manipulation of the transceiver:

ESD

This transceiver is specified as ESD threshold 1kV for SFI pins and 2kV for all others electrical input pins, tested per MIL-STD-883G, Method 3015.4 /JESD22-A114-A (HBM). However, normal ESD precautions are still required during the handling of this module.

LASER SAFETY

This is a Class1 Laser Product according to IEC 60825-1:2007. This product complies with 21 CFR 1040.10 and 1040.11 except for deviations pursuant to Laser Notice No. 50, dated (June 24, 2007).

The optical ports of the module need to be terminated with an optical connector or with a dust plug in order to avoid contamination.

Absolute Maximum Ratings

Parameter	Symbol	Min.	Typ.	Max.	Unit
Supply Voltage	Vcc	-0.5		3.6	V
Storage Temperature	Tstg	-40		85	°C
Operating Case Temperature	Tc	0	25	70	°C
Relative Humidity	RH	5		85	%
Data Rate Per Channel			4*10.3		Gbps

Electrical Specifications

Parameter	Symbol	Min.	Typ.	Max.	Unit	Notes
Supply Voltage	Vcc	3.135	3.3	3.465	V	
Supply Current	Icc			400	mA	
Power Dissipation	P_{DISS}			1500	mW	
Clock Rate - I2C				400	KHz	1
Module Turn-On Time				2000	ms	2

Notes:

1. For the management interface.
2. Time from module power-on/insertion/ResetL de-assert to module fully functional.

Optical Characteristics

Parameter	Symbol	Min.	Typ.	Max.	Unit	Notes
Transmitter						
Reference Differential Input	Zd		100		Ω	1
Optical Return Loss Tolerance				12	dB	
Differential Data Input Swing	VIN,pp	180		1200	mV	
Differential Data Input Threshold			50		mV	2
Receiver						
Reference Differential Input Impedance	Zd		100		Ω	1
Differential Data Output Swing	VOUT,pp	0		800	mV	
Pre-Emphasis Pulse Amplitude Percentage		0			%	4
		10			%	
		20			%	
		40			%	
Pre-Emphasis Pulse Duration			30		ps	
Signal Speed			4*10.3		Gbps	
Differential Data Output Swing		150		850	mV	
Differential Data Output Swing When Squelched				50	mV	
Rise/Fall Time (20-80%)		24			ps	

Notes:

1. AC coupled inside the AOC module.
2. Input swing to trigger Tx-squelch.
3. User selectable. Percentage is the ratio of pre-emphasis amplitude to output swing. Users could change by writing to page 3 address 237, default value is “10.”

Pin Descriptions

Pin	Logic	Symbol	Name/Description	Note
1		GND	Module Ground.	1
2	CML-I	Tx2-	Transmitter Inverted Data Input.	
3	CML-I	Tx2+	Transmitter Non-Inverted Data Input.	
4		GND	Module Ground.	1
5	CML-I	Tx4-	Transmitter Inverted Data Input.	
6	CML-I	Tx4+	Transmitter Non-Inverted Data Input.	
7		GND	Module Ground.	1
8	LVTTL-I	ModSelL	Module Select.	2
9	LVTTL-I	ResetL	Module Reset.	2
10		VccRx	+3.3V Receiver Power Supply.	
11	LVCMOS-I/O	SCL	2-Wire Serial Interface Clock.	2
12	LVCMOS-I/O	SDA	2-Wire Serial Interface Data.	2
13		GND	Module Ground.	1
14	CML-O	Rx3+	Receiver Non-Inverted Data Output.	
15	CML-O	Rx3-	Receiver Inverted Data Output.	
16		GND	Module Ground.	1
17	CML-O	Rx1+	Receiver Non-Inverted Data Output.	
18	CML-O	Rx1-	Receiver Inverted Data Output.	
19		GND	Module Ground.	1
20		GND	Module Ground.	1
21	CML-O	Rx2-	Receiver Inverted Data Output.	
22	CML-O	Rx2+	Receiver Non-Inverted Data Output.	
23		GND	Module Ground.	1
24	CML-O	Rx4-	Receiver Inverted Data Output.	
25	CML-O	Rx4+	Receiver Non-Inverted Data Output.	
26		GND	Module Ground.	1
27	LVTTL-O	ModPrsL	Module Present. Internally pulled down to the GND.	
28	LVTTL-O	IntL	Interrupt output should be pulled up on the host board.	2
29		VccTx	+3.3V Transmitter Power Supply.	
30		Vcc1	+3.3V Power Supply.	
31	LVTTL-I	LPMode	Low-Power Mode.	2
32		GND	Module Ground.	1
33	CML-I	Tx3+	Transmitter Non-Inverted Data Input.	
34	CML-I	Tx3-	Transmitter Inverted Data Input.	
35		GND	Module Ground.	1
36	CML-I	Tx1+	Transmitter Non-Inverted Data Input.	
37	CML-I	Tx1-	Transmitter Inverted Data Input.	

Notes:

1. GND is the symbol for signal and supply (power). Connect these directly to the host board signal common ground plane.

2. VccRx, Vcc1, and VccTx are the receiving and transmission power suppliers and shall be applied concurrently. VccRx, Vcc1, and VccTx may be internally connected within the QSFP+. The connector pins are each rated for a maximum current of 500mA.

Pin Assignment and Pin Description

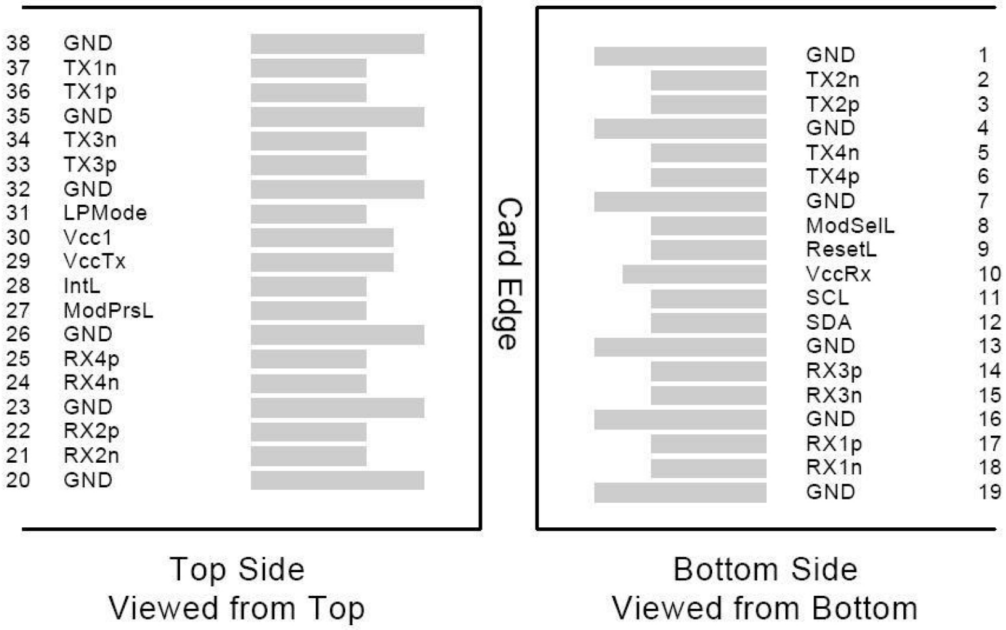

Recommended Application Interface Circuit

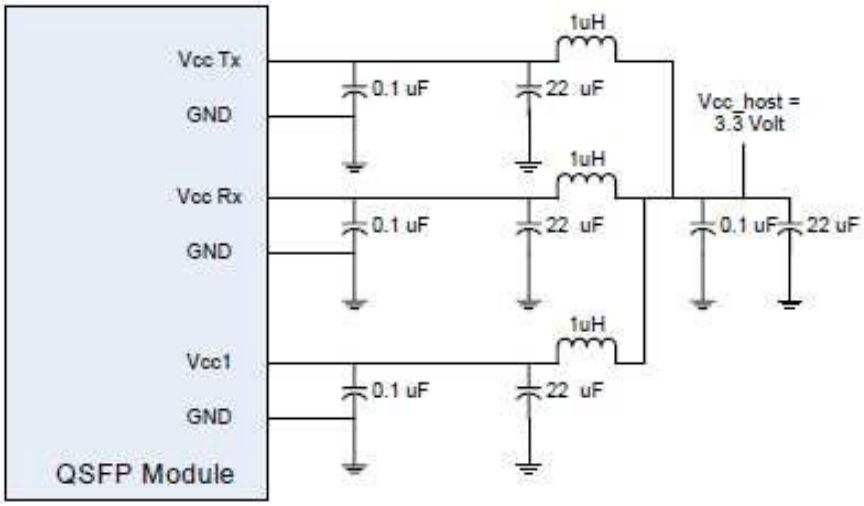

Mechanical Specifications

Parameter	Symbol	Min.	Typ.	Max.	Unit	Notes
AOC Cable Length (L>5m)	L	L-(L*1.1%)	L	L+(L*1.1%)	M	
Module Retention		90		170	N	
Module Insertion		0		18	N	
Module Extraction		0		25	N	
Cable Pull Strength – Apply Load at 0°		44			N	
Cable Pull Strength – Apply Load at 90°		33			N	
Clearance Out of IO Bezel		75			nm	
Cable Bending Radius		3			cm	
Insertion/Removal Cycles		50			Cycles	

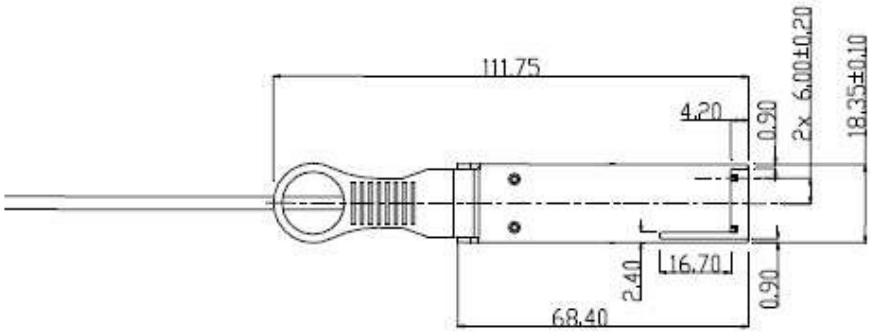

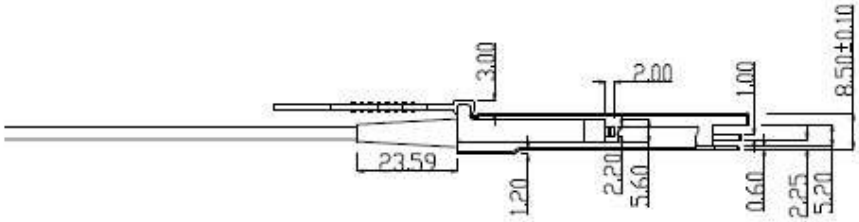

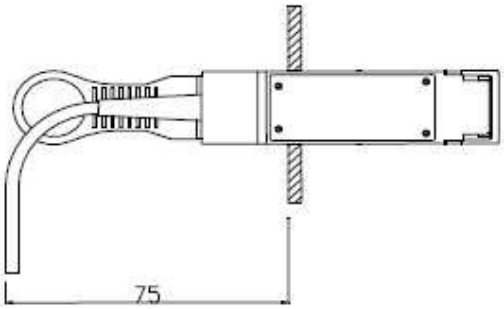

Clearance 75mm Is Required.

Cable Type: Low Smoke Zero Halogen

About Skylane Optics

Skylane is a leading provider of transceivers for optical communication.

We offer an extensive portfolio for the enterprise, access, datacenter and metropolitan fiber optical market as well as for smart home applications and home networks.

We cover the European, South American and North American market with a strong partner network and have offices in Belgium, Brazil, Sweden and USA.

Our offerings are characterized by high quality and performance. In combination with our strong technical support, we enable our customers to build cost optimized network solutions.

We offer an extensive range of high-quality products including transceivers (Optical and copper), Active Optical Cable (AOC), Direct Attach Cable (DAC), Mux/Demux, Coding Box.