QDD-400G-LR8-S-40-SKY

Cisco® QDD-400G-LR8-S-40 Compatible 400GBase-ER8 PAM4 QSFP-DD Transceiver (SMF, 1270nm to 1330nm, 40km, LC, DOM, CMIS 4.0)

Product Description

This Cisco® QDD-400G-LR8-S-40 compatible QSFP-DD transceiver provides 400GBase-ER8 throughput up to 40km over single-mode fiber (SMF) PAM4 using a wavelength of 1270nm to 1330nm via an LC connector. It can operate at temperatures between 0 and 70C. Our transceiver is built to meet or exceed OEM specifications and is guaranteed to be 100% compatible with Cisco®. It has been programmed, uniquely serialized, and tested for data-traffic and application to ensure that it will initialize and perform identically. All of our transceivers comply with Multi-Source Agreement (MSA) standards to provide seamless network integration. Additional product features include Digital Optical Monitoring (DOM) support which allows access to real-time operating parameters. We stand behind the quality of our products and proudly offer a limited lifetime warranty.

Skylane's transceivers are RoHS compliant and lead-free.

Features:

- Compliant with IEEE std 802.3cn-2019
- Compliant with QSFP-DD CMIS Rev 4.0
- Compliant with QSFP-DD MSA HW Rev 5.1
- Maximum link length of 40km on Single Mode Fiber (SMF)
- 8x50G PAM4 retimed 400GAUI-8 electrical interface
- Power dissipation
- Class 1/1M Laser
- Operating Case Temperature 0 to 70 Celsius
- I2C management interface
- Duplex LC receptacles
- RoHS Compliant and Lead-Free

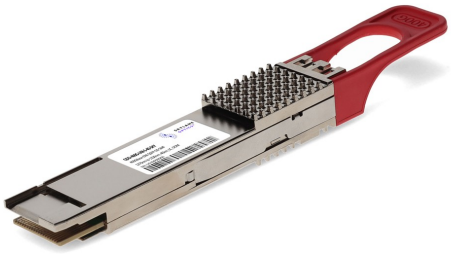

Applications:

- 400GBase Ethernet
- Access and Enterprise

For your product safety, please read the following information carefully before any manipulation of the transceiver:

ESD

This transceiver is specified as ESD threshold 1kV for SFI pins and 2kV for all others electrical input pins, tested per MIL-STD-883G, Method 3015.4 /JESD22-A114-A (HBM). However, normal ESD precautions are still required during the handling of this module.

LASER SAFETY

This is a Class1 Laser Product according to IEC 60825-1:2007. This product complies with 21 CFR 1040.10 and 1040.11 except for deviations pursuant to Laser Notice No. 50, dated (June 24, 2007).

The optical ports of the module need to be terminated with an optical connector or with a dust plug in order to avoid contamination.

Regulatory Compliance

- ESD to the Electrical PINs: compatible with MIL-STD-883E Method 3015.4
- ESD to the LC Receptacle: compatible with IEC 61000-4-3
- EMI/EMC compatible with FCC Part 15 Subpart B Rules, EN55022:2010
- Laser Eye Safety compatible with FDA 21CFR, EN60950-1& EN (IEC) 60825-1,2
- RoHS compliant with EU RoHS 2.0 directive 2015/863/EU

Absolute Maximum Ratings

Parameter	Symbol	Min.	Typ.	Max.	Unit	Notes
Storage Temperature	T_s	-40		85	°C	
Maximum Supply Voltage	Vcc	-0.5		3.6	V	
Relative Humidity (non-condensing)	RH	5		95	%	
Operating Case Temperature	T_{opr}	0		70	°C	
Relative Humidity (non-condensing)	RH	5		85	%	
Control Input Voltage	V_I	-0.3		Vcc+0.5	V	
Control Output Current	Io	-20		20	mA	
Signaling Speed per Lane	DRL		26.5625		GBd	
Operating Distance		0.002		40	km	1

Notes:

1. Channel insertion loss is 18dB for 40km.

Electrical Characteristics (High Speed Signal- compliant with IEEE 802.3 400GAUI-8)

Parameter	Symbol	Min	Typ	Max	Unit	Notes
Supply Voltage	Vcc	3.135	3.3	3.465	V	
Maximum Power Dissipation	P_D			14	W	
Maximum Power Dissipation, Low Power Mode	P_{DLP}			1.5	W	
Instantaneous peak current at hot plug	I_{cc_IP}			5600	mA	
Sustained peak current at hot plug	I_{cc_SP}			4620	mA	
Control Input Voltage High	V_{IH}	Vcc*0.7		Vcc+0.3	V	
Control Input Voltage Low	V_{IL}	-0.3		Vcc*0.3	V	
Two Wire Serial Interface Clock Rate				400	kHz	
Power Supply Noise				66	mVpp	
Rx Differential Data Output Load			100		Ohm	
Transmitter						
AC Common- mode output Voltage (RMS)				17.5	mV	
Differential Output Voltage				900	mV	
Near end Eye Height, differential		70			mV	
Far-end Eye height, differential		30			mV	
Eye width Far end pre-cursor ratio				2.5	%	
Differential Termination Mismatch				10	%	
Transition Time (min, 20% to 80%)		9.5			ps	
DC common mode Voltage		-350		2850	mV	
Receiver						
Differential pk-pk input Voltage tolerance		900			mV	
Differential termination mismatch				10	%	
Single-ended voltage tolerance range		-0.4		3.3	V	
DC common mode Voltage		-350		2850	mV	
Low Speed Signal (compliant with QSFP-DD HW Rev 5.1						
Module output SCL and SDA	V_{OL}	0		0.4	V	
Module Input SCL and SDA	V_{IL}	-0.3		Vcc*0.3	V	
	V_{IH}	Vcc*0.7		Vcc+0.5	V	
InitMode, ResetL and ModSelL	V_{IL}	-0.3		0.8	V	
	V_{IH}	2		Vcc+0.3	V	
IntL		0		0.4	V	
		Vcc-0.5		Vcc+0.3	V	

Optical Characteristics

Parameter		Symbol	Min	Typical	Max	Unit	Notes
Transmitter							
Transmit wavelengths	L0	λ_{C0}	1272.55	1273.55	1274.54	nm	
	L1	λ_{C1}	1276.89	1277.89	1278.89	nm	
	L2	λ_{C2}	1281.25	1282.26	1283.27	nm	
	L3	λ_{C3}	1285.65	1286.67	1287.68	nm	
	L4	λ_{C4}	1294.53	1295.56	1296.59	nm	
	L5	λ_{C5}	1299.02	1300.06	1301.09	nm	
	L6	λ_{C6}	1303.54	1304.59	1305.63	nm	
	L7	λ_{C7}	1308.09	1309.14	1310.19	nm	
Side Mode Suppression Ratio		SMSR	30			dB	
Total Average Launch Power		AOP_T			14.6	dBm	
Average Launch Power, each lane		AOP_L	0.6		5.6	dBm	1
Outer Optical Modulation Amplitude (OMAouter), each Lane		T_{OMA}	2.4		6.4	dBm	
Difference in Launch Power between any two Lanes (OMAouter)		D_T OMA			4	dB	
Launch Power in OMAouter minus TDECQ, each lane		$T_{OMA,TDECQ}$	1			dBm	
Transmitter and Dispersion Eye Closure for PAM4 (TDECQ), each lane		TDECQ			3.4	dB	
TDECQ-10log10(Ceg)					3.4	dB	
Average Launch Powr of OFF Transmitter, each land		T_{OFF}			-30	dBm	
Extinction Ratio		ER	6			dB	
RIN15OMA		RIN			-132	dB/Hz	1
Optical Return Loss Tolerance		ORL			15	dB	
Transmitter Reflectance		T_R			-26	dB	2
Receiver							
Receiver wavelengths	L0	λ_{C0}	1272.55	1273.55	1274.54	nm	
	L1	λ_{C1}	1276.89	1277.89	1278.89	nm	
	L2	λ_{C2}	1281.25	1282.26	1283.27	nm	
	L3	λ_{C3}	1285.65	1286.67	1287.68	nm	
	L4	λ_{C4}	1294.53	1295.56	1296.59	nm	
	L5	λ_{C5}	1299.02	1300.06	1301.09	nm	
	L6	λ_{C6}	1303.54	1304.59	1305.63	nm	
	L7	λ_{C7}	1308.09	1309.14	1310.19	nm	
Damage Threshold, each Lane		AOPD	-3.4			dBm	

Average Receive Power, each Lane	AOPR	18.6		-4.4	dBm	
Receiver Power (OMAouter), each Lane	OMAR			-3.6	dBm	
Difference in Receiver Power between any two Lanes (OMAouter)	DR_OMA			5.8	dB	
Receiver Reflectance	RR			-26	dB	
Receiver Sensitivity (OMAouter), each Lane	SOMA	-		Max(-16.1, SECQ-17.5)	dBm	3
Stressed Receiver Sensitivity (OMAouter), each Lane	SRS			-14.1	dBm	4
Conditions of stressed receiver sensitivity test:						
Stressed eye closure for PAM4 (SECQ), lane under test			3.4		dB	
SECQ-10log10(Ceg), lane under test				3.4	dB	
OMAouter of each aggressor lane			-8.3		dBm	

Notes:

1. Average launch power, each lane (min) is informative and not the principle of signal strength
2. Transmitter reflectance is defined looking into the transmitter
3. Receiver sensitivity (OMAouter), each lane (max) is informative and is defined for a transmitter with SECQ of 1.4 dB.
4. Measured with conformance test signal at TP3 for the BER = 2.4×10^{-4}

Timing for Soft Control and Status Functions

Parameter	Symbol	Min	Max	Unit	Notes
MgmtInit Duration			2000	ms	
ResetL Assert Time	t_reset_init	10		µs	
IntL Assert Time	ton_IntL		200	ms	
IntL Deassert Time	toff_IntL		500	µs	
Rx LOS Assert Time	ton_losf		100	ms	
Flag Assert Time	ton_flag		200	ms	
Mask Assert Time	ton_mask		100	ms	
Mask Deassert Time	toff_mask		100	ms	
Module Select Wait Time	ModSelL Wait Time		N/A		Not support

I/O Timing for Squelch and Disable

Parameter	Symbol	Min	Max	Unit	Notes
Rx Squelch Assert Time	ton_Rxsq		50	ms	
Tx Squelch Assert Time	ton_Txsq		400	ms	
Tx Squelch Deassert Time	toff_Txsq		1500	ms	Based on Modulation
Tx Disable Assert Time (fast mode)	ton_Txdisf		3	ms	
Tx Disable Deassert Time (fast mode)	toff_Txdisf		10	ms	
Rx Output Disable Assert Time	ton_Rxdis		100	ms	
Rx Output Disable Deassert Time	toff_Rxdis		100	ms	
Squelch Disable Assert Time	ton_sqdis		N/A	ms	Not support
Squelch Disable Deassert Time	toff_sqdis		N/A	ms	Not support

Digital Diagnostics

Parameter	Range	Accuracy	Unit	Calibration
Temperature	0 to 70	±3	ºC	Internal
Voltage	0 to V_{CC}	0.1	V	Internal
Tx Bias Current (Each Lane)	0 to 100	10%	mA	Internal
Tx Output Power (Each Lane)	-0.6 to +5.6	±3	dB	Internal
Rx Receive Power (Each Lane)	-18.6 to -4.4	±3	dB	Internal

Pin Descriptions

Pin	Logic	Symbol	Name/Descriptions
1		GND	Ground
2	CML-I	Tx2n	Transmitter Inverted Data Input
3	CML-I	Tx2p	Transmitter Non-inverted Data Input
4		GND	Ground
5	CML-I	Tx4n	Transmitter Inverted Data Input
6	CML-I	Tx4p	Transmitter Non-inverted Data Input
7		GND	Ground
8	LVTTL-I	ModSelL	Module Select
9	LVTTL-I	ResetL	Module Reset
10		VccRx	+3.3V Power Supply Receiver
11	LVCMOS-I/O	SCL	2-wire serial interface clock
12	LVCMOS-I/O	SDA	2-wire serial interface data
13		GND	Ground
14	CML-O	Rx3p	Receiver Non-inverted Data Output
15	CML-O	Rx3n	Receiver Inverted Data Output
16		GND	Ground
17	CML-O	Rx1p	Receiver Non-inverted Data Output
18	CML-O	Rx1n	Receiver Inverted Data Output
19		GND	Ground
20		GND	Ground
21	CML-O	Rx2n	Receiver Inverted Data Output
22	CML-O	Rx2p	Receiver Non-inverted Data Output
23		GND	Ground
24	CML-O	Rx4n	Receiver Inverted Data Output
25	CML-O	Rx4p	Receiver Non-inverted Data Output
26		GND	Ground
27	LVTTL-O	ModPrsL	Module Present
28	LVTTL-O	IntL	Interrupt
29		VccTx	+3.3V Power Supply Transmitter
30		Vcc1	+3.3V Power Supply
31	LVTTL-I	InitMode	Initialization mode
32		GND	Ground
33	CML-I	Tx3p	Transmitter Non-inverted Data Input
34	CML-I	Tx3n	Transmitter Inverted Data Input
35		GND	Ground
36	CML-I	Tx1p	Transmitter Non-inverted Data Input
37	CML-I	Tx1n	Transmitter Inverted Data Input
38		GND	Ground
39		GND	Ground

40	CML-I	Tx6n	Transmitter Inverted Data Input
41	CML-I	Tx6p	Transmitter Non-inverted Data Input
42		GND	Ground
43	CML-I	Tx8n	Transmitter Inverted Data Input
44	CML-I	Tx8p	Transmitter Non-inverted Data Input
45		GND	Ground
46		Reserved	
47		VS1	Module Vendor Specific 1
48		VccRx1	3.3V Power Supply
49		VS2	Module Vendor Specific 2
50		VS3	Module Vendor Specific 3
51		GND	Ground
52	CML-O	Rx7p	Receiver Non-inverted Data Output
53	CML-O	Rx7n	Receiver Inverted Data Output
54		GND	Ground
55	CML-O	Rx5p	Receiver Non-inverted Data Output
56	CML-O	Rx5n	Receiver Inverted Data Output
57		GND	Ground
58		GND	Ground
59	CML-O	Rx6n	Receiver Inverted Data Output
60	CML-O	Rx6p	Receiver Non-inverted Data Output
61		GND	Ground
62	CML-O	Rx8n	Receiver Inverted Data Output
63	CML-O	Rx8p	Receiver Non-inverted Data Output
64		GND	Ground
65		NC	Not connected
66		Reserved	
67		VccTx1	3.3V Power Supply
68		Vcc2	3.3V Power Supply
69		Reserved	
70		GND	Ground
71	CML-I	Tx7p	Transmitter Non-inverted Data Input
72	CML-I	Tx7n	Transmitter Inverted Data Input
73		GND	Ground
74	CML-I	Tx5p	Transmitter Non-inverted Data Input
75	CML-I	Tx5n	Transmitter Inverted Data Input
76		GND	Ground

Notes:

1. Circuit ground is internally isolated from chassis ground.

MSA Compliant Connector

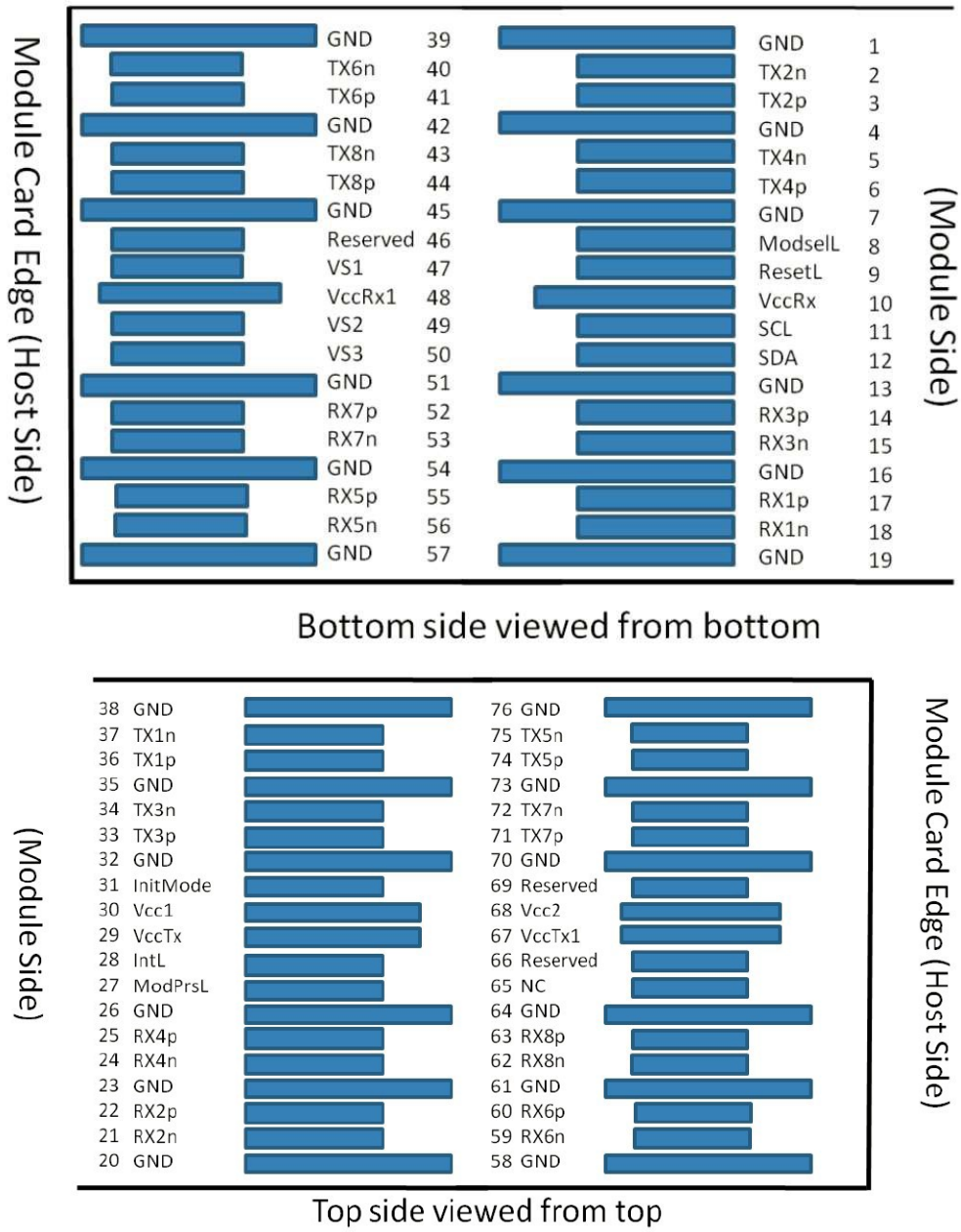

Pin definitions of the module high speed inputs/outputs

Recommended QSFP-DD Host Board Schematic

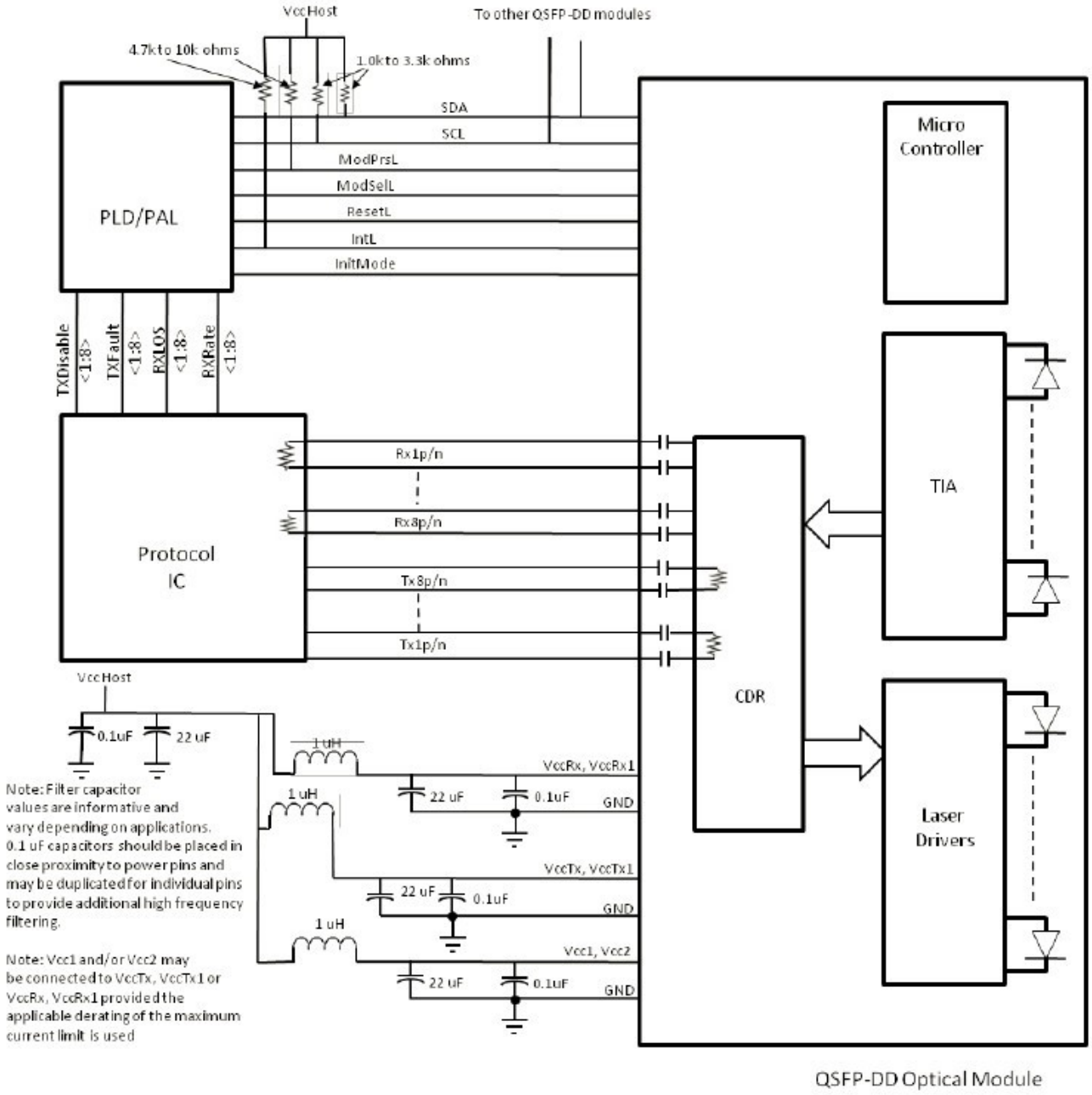

Transceiver Block Diagram

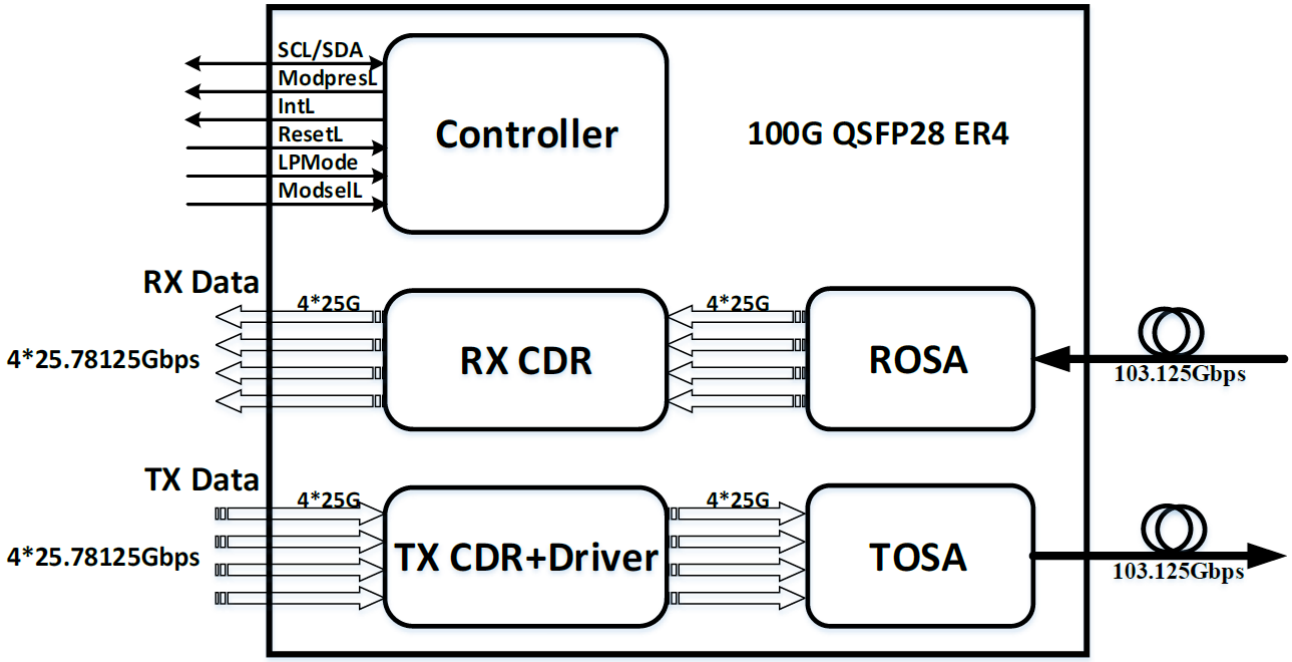

Mechanical Specifications

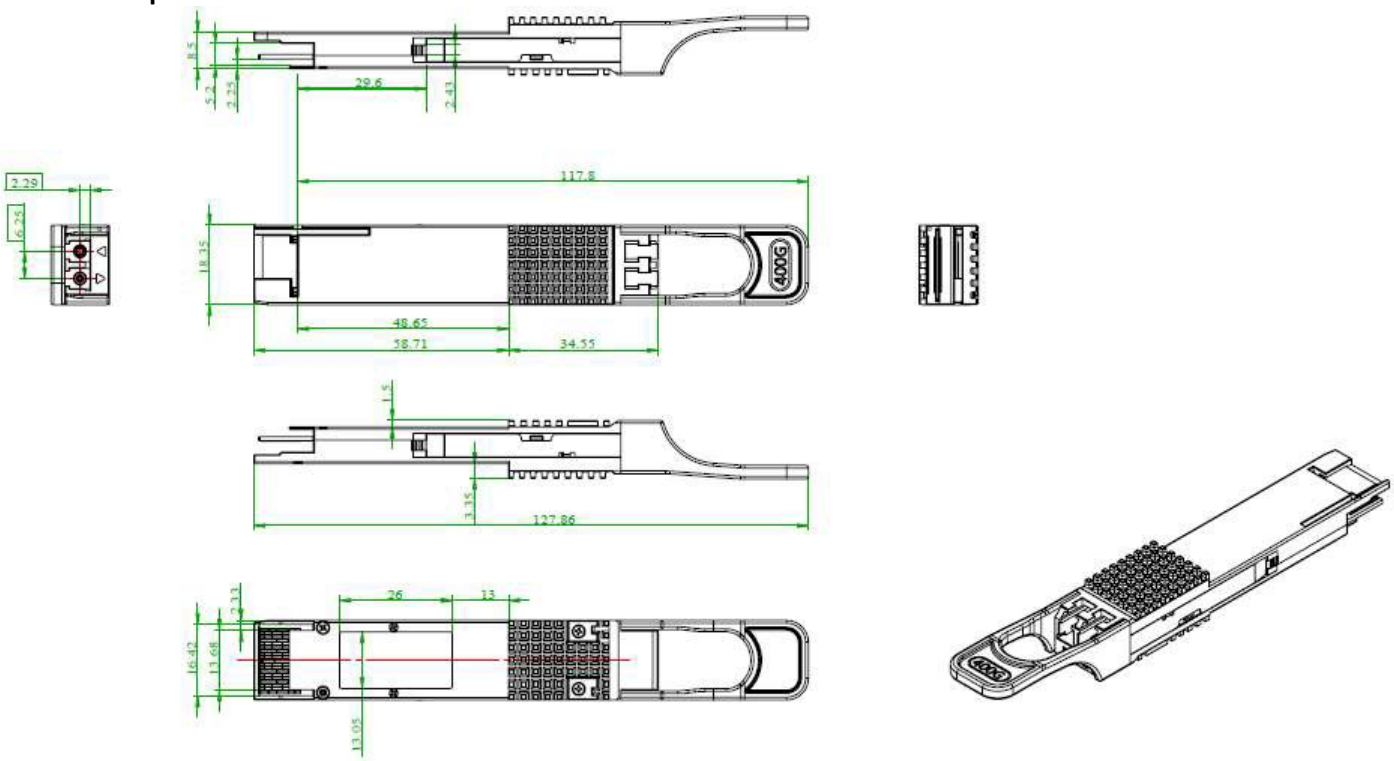

About Skylane Optics

Skylane is a leading provider of transceivers for optical communication.

We offer an extensive portfolio for the enterprise, access, datacenter and metropolitan fiber optical market as well as for smart home applications and home networks.

We cover the European, South American and North American market with a strong partner network and have offices in Belgium, Brazil, Sweden and USA.

Our offerings are characterized by high quality and performance. In combination with our strong technical support, we enable our customers to build cost optimized network solutions.

We offer an extensive range of high-quality products including transceivers (Optical and copper), Active Optical Cable (AOC), Direct Attach Cable (DAC), Mux/Demux, Coding Box.