QDD-400G-2Q56-PDAC2-5M-N-SKY

Alcatel-Lucent Nokia® Compatible 400GBase-CU QSFP-DD 400G to 2xQSFP56 200G PAM-4 Direct Attach Cable (Passive Twinax, 2.5m)

Product Description

This is an Alcatel-Lucent Nokia® compatible 400GBase-CU QSFP-DD 400G to 2xQSFP56 200G PAM-4 direct attach cable that operates over passive copper with a maximum reach of 2.5m (8.2ft). It has been programmed, uniquely serialized, and data-traffic and application tested to ensure it is 100% compliant and functional. This direct attach cable is built to comply with MSA (Multi-Source Agreement) standards. We stand behind the quality of our products and proudly offer a limited lifetime warranty.

Skylane's transceivers are RoHS compliant and lead-free.

Features:

- QSFP-DD MSA Compliant
- Transmission Data Rate Up to 53.125Gbps per Channel
- QSFP Module Compliant to SFF-8661
- Built-in EEPROM Functions
- Operating Temperature: 0 to 70 Celsius
- Enable 400Gbps to 2x20Gbps Transmission
- RoHS Compliant and Lead-Free

Applications:

- 400GBase Ethernet

For your product safety, please read the following information carefully before any manipulation of the transceiver:

ESD

This transceiver is specified as ESD threshold 1kV for SFI pins and 2kV for all others electrical input pins, tested per MIL-STD-883G, Method 3015.4 /JESD22-A114-A (HBM). However, normal ESD precautions are still required during the handling of this module.

LASER SAFETY

This is a Class1 Laser Product according to IEC 60825-1:2007. This product complies with 21 CFR 1040.10 and 1040.11 except for deviations pursuant to Laser Notice No. 50, dated (June 24, 2007).

The optical ports of the module need to be terminated with an optical connector or with a dust plug in order to avoid contamination.

Absolute Maximum Ratings

Parameter	Symbol	Min.	Typ.	Max.	Unit
Supply Voltage	Vcc	3.13	3.3	3.47	V
Storage Temperature	Tstg	-40		85	°C
Operating Case Temperature	Tc	0		70	°C
Relative Humidity	RH	5		85	%
Data Rate			400		Gbps

Physical Characteristics

Parameter	Symbol	Min.	Typ.	Max.	Unit	Notes
Length	L			2.5	M	
AWG			27		AWG	
Jacket Material		PVC, Black				

Electrical Specifications

Parameter	Symbol	Min.	Typ.	Max.	Unit	Notes
Resistance	Rcon			3	Ω	
Insulation Resistance	Rins			10	MΩ	
Raw Cable Impedance	Zca	95	100	110	Ω	
Mated Connector Impedance	Zmated	85	100	115	Ω	
Insertion Loss @13.28GHz	SDD21	8		17.16	dB	
Return Loss	SDD11/22	$\text{Return_loss}(f) \geq \begin{cases} 16.5-2\sqrt{f} & 0.05 \leq f < 4.1 \\ 10.66-14\log_{10}(f/5.5) & 4.1/7.5 \leq f \leq 19 \end{cases}$			dB	1
Differential to Common-Mode Return Loss	SCD11/22	$\text{Return_loss}(f) \geq \begin{cases} 22-(20/25.78)f & 0.01 \leq f < 12.89 \\ 15+(6/25.78)f & 12.89 \leq f \leq 19 \end{cases}$			dB	1
Differential to Common-Mode Conversion Loss	SCD21-SDD21	$\text{Conversion_loss}(f) - IL(f) \geq \begin{cases} 10 & 0.01 \leq f < 12.89 \\ 27-(29/22)f & 12.89 \leq f < 15.7 \\ 6.3 & 15.7 \leq f \leq 19 \end{cases}$			dB	1
Minimum COM	COM	3			dB	

Notes:

1. For 0.05≤f≤GHz, where f is the frequency on GHz.

Pin Descriptions- QSFP-DD End

Pin	Logic	Symbol	Name/Description	Plug Sequence	Notes
1		GND	Module Ground.	1B	1
2	CML-I	Tx2-	Transmitter Inverted Data Input.	3B	
3	CML-I	Tx2+	Transmitter Non-Inverted Data Input.	3B	
4		GND	Module Ground.	1B	1
5	CML-I	Tx4-	Transmitter Inverted Data Input.	3B	
6	CML-I	Tx4+	Transmitter Non-Inverted Data Input.	3B	
7		GND	Module Ground.	1B	1
8	LVTTL-I	ModSelL	Module Select.	3B	
9	LVTTL-I	ResetL	Module Reset.	3B	
10		VccRx	+3.3V Receiver Power Supply.	2B	2
11	LVCMOS-I/O	SCL	2-Wire Serial Interface Clock.	3B	
12	LVCMOS-I/O	SDA	2-Wire Serial Interface Data.	3B	
13		GND	Module Ground.	1B	1
14	CML-O	Rx3+	Receiver Non-Inverted Data Output.	3B	
15	CML-O	Rx3-	Receiver Inverted Data Output.	3B	
16		GND	Module Ground.	1B	1
17	CML-O	Rx1+	Receiver Non-Inverted Data Output.	3B	
18	CML-O	Rx1-	Receiver Inverted Data Output.	3B	
19		GND	Module Ground.	1B	1
20		GND	Module Ground.	1B	1
21	CML-O	Rx2-	Receiver Inverted Data Output.	3B	
22	CML-O	Rx2+	Receiver Non-Inverted Data Output.	3B	
23		GND	Module Ground.	1B	1
24	CML-O	Rx4-	Receiver Inverted Data Output.	3B	
25	CML-O	Rx4+	Receiver Non-Inverted Data Output.	3B	
26		GND	Module Ground.	1B	1
27	LVTTL-O	ModPrsL	Module Present.	3B	
28	LVTTL-O	IntL/RxLOS	Interrupt. Optio0na RxLOS.	3B	
29		VccTx	+3.3V Transmitter Power Supply.	2B	2
30		Vcc1	+3.3V Power Supply.	2B	2
31	LVTTL-I	LPMode/TxDis	Low Power Mode. Optional Tx Disable.	3B	
32		GND	Module Ground.	1B	1
33	CML-I	Tx3+	Transmitter Non-Inverted Data Input.	3B	
34	CML-I	Tx3-	Transmitter Inverted Data Input.	3B	
35		GND	Module Ground.	1B	1
36	CML-I	Tx1+	Transmitter Non-Inverted Data Input.	3B	
37	CML-I	Tx1-	Transmitter Inverted Data Input.	3B	
38		GND	Module Ground.	1B	1
39		GND	Module Ground.	1A	1
40	CML-I	Tx6-	Transmitter Inverted Data Input.	3A	
41	CML-I	Tx6+	Transmitter Non-Inverted Data Input.	3A	

42		GND	Module Ground.	1A	
43	CML-I	Tx8-	Transmitter Inverted Data Input.	3A	
44	CML-I	Tx8+	Transmitter Non-Inverted Data Input.	3A	
45		GND	Module Ground.	1A	
46	LVCMOS/CML-I	P/VS4	Programmable. Module Vendor-Specific 4.	3A	5
47	LVCMOS/CML-I	P/VS1	Programmable. Module Vendor-Specific 1.	3A	5
48		VccRx1	+3.3V Receiver Power Supply.	2A	2
49	LVCMOS/CML-O	P/VS2	Programmable. Module Vendor-Specific 2.	3A	5
50	LVCMOS/CML-O	P/VS3	Programmable. Module Vendor-Specific 3.	3A	5
51		GND	Module Ground.	1A	1
52	CML-O	Rx7+	Receiver Non-Inverted Data Output.	3A	
53	CML-O	Rx7-	Receiver Inverted Data Output.	3A	
54		GND	Module Ground.	1A	1
55	CML-O	Rx5+	Receiver Non-Inverted Data Output.	3A	
56	CML-O	Rx5-	Receiver Inverted Data Output.	3A	
57		GND	Module Ground.	1A	1
58		GND	Module Ground.	1A	1
59	CML-O	Rx6-	Receiver Inverted Data Output.	3A	
60	CML-O	Rx6+	Receiver Non-Inverted Data Output.	3A	
61		GND	Module Ground.	1A	1
62	CML-O	Rx8-	Receiver Inverted Data Output.	3A	
63	CML-O	Rx8+	Receiver Non-Inverted Data Output.	3A	
64		GND	Module Ground.	1A	1
65		NC	Not Connected.	3A	3
66		Reserved	For Future Use.	3A	3
67		VccTx1	+3.3V Power Supply.	2A	2
68		Vcc2	+3.3V Power Supply.	2A	2
69	LVCMOS-I	ePPS/Clock	1PPS PTP Clock or Reference Clock Input.	3A	6
70		GND	Module Ground.	1A	1
71	CML-I	Tx7+	Transmitter Non-Inverted Data Input.	3A	
72	CML-I	Tx7-	Transmitter Inverted Data Input.	3A	
73		GND	Module Ground.	1A	1
74	CML-I	Tx5+	Transmitter Non-Inverted Data Input.	3A	
75	CML-I	Tx5-	Transmitter Inverted Data Input.	3A	
76		GND	Module Ground.	1A	1

Notes:

1. QSFP-DD uses common ground (GND) for all signals and supply (power). All are common within the QSFP-DD module, and all module voltages are referenced to this potential unless otherwise noted. Connect these directly to the host board signal common ground plane. Each connector GND contact is rated for maximum current of 500mA.
2. VccRx, VccRx1, Vcc1, Vcc2, VccTx, and VccTx1 shall be applied concurrently. Requirements defined for the host side of the Host Card Edge Connector are listed below. For power classes 4 and above, the

module differential loading of input voltage pads must not result in exceeding contact current limits. Each connector Vcc contact is rated for a maximum current of 1500mA.

3. Reserved and no Connect pads recommended to be terminated with 10kΩ to ground on the host. Pad 65 (No Connect) shall be left unconnected within the module.
4. Plug sequence specifies the mating sequence of the host connector and module. The sequence is 1A, 2A, 3A, 1B, 2B, and 3B. Contact sequence A will make, then break contact with additional QSFP-DD pads. Sequence 1A and 1B will then occur simultaneously, followed by 2A and 2B, followed by 3A and 3B.
5. Full definitions of P/VSx signals currently under development. On new designs not used P/VSx signals are recommended to be terminated on the host with 10kΩ.
6. ePPS/Clock if not used recommended to be terminated with 50Ω to ground on the host.

Pin-Out Detail QSFP-DD End

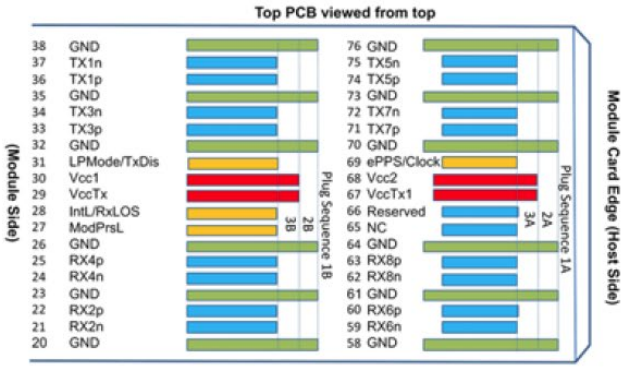

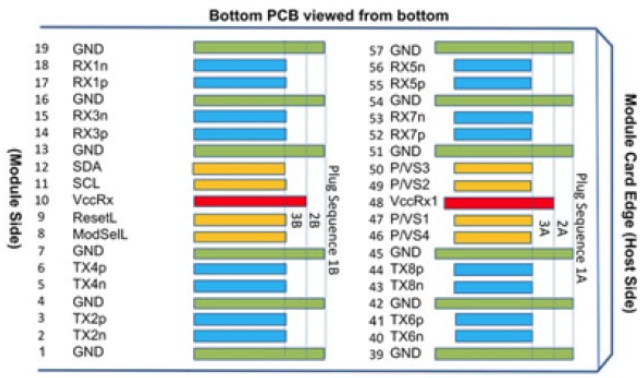

Pin Descriptions- QSFP End

Pin	Logic	Symbol	Name/Description	Plug Sequence	Notes
1		GND	Module Ground.	1	1
2	CML-I	Tx2-	Transmitter Inverted Data Input.	3	
3	CML-I	Tx2+	Transmitter Non-Inverted Data Input.	3	
4		GND	Module Ground.	1	1
5	CML-I	Tx4-	Transmitter Inverted Data Input.	3	
6	CML-I	Tx4+	Transmitter Non-Inverted Data Input.	3	
7		GND	Module Ground.	1	1
8	LVTTL-I	ModSelL	Module Select.	3	
9	LVTTL-I	ResetL	Module Reset.	3	
10		VccRx	+3.3V Receiver Power Supply.	2	2
11	LVCMOS-I/O	SCL	2-Wire Serial Interface Clock.	3	
12	LVCMOS-I/O	SDA	2-Wire Serial Interface Data.	3	
13		GND	Module Ground.	1	1
14	CML-O	Rx3+	Receiver Non-Inverted Data Output.	3	
15	CML-O	Rx3-	Receiver Inverted Data Output.	3	
16		GND	Module Ground.	1	1
17	CML-O	Rx1+	Receiver Non-Inverted Data Output.	3	
18	CML-O	Rx1-	Receiver Inverted Data Output.	3	
19		GND	Module Ground.	1	1
20		GND	Module Ground.	1	1
21	CML-O	Rx2-	Receiver Inverted Data Output.	3	
22	CML-O	Rx2+	Receiver Non-Inverted Data Output.	3	
23		GND	Module Ground.	1	1
24	CML-O	Rx4-	Receiver Inverted Data Output.	3	
25	CML-O	Rx4+	Receiver Non-Inverted Data Output.	3	
26		GND	Module Ground.	1	1
27	LVTTL-O	ModPrsL	Module Present.	3	
28	LVTTL-O	IntL	Interrupt.	3	
29		VccTx	+3.3V Transmitter Power Supply.	2	2
30		Vcc1	+3.3V Power Supply.	2	2
31	LVTTL-I	LPMode	Low-Power Mode.	3	
32		GND	Module Ground.	1	1
33	CML-I	Tx3+	Transmitter Non-Inverted Data Input.	3	
34	CML-I	Tx3-	Transmitter Inverted Data Input.	3	

35		GND	Module Ground.	1	1
36	CML-I	Tx1+	Transmitter Non-Inverted Data Input.	3	
37	CML-I	Tx1-	Transmitter Inverted Data Input.	3	
38		GND	Module Ground.	1	1

Notes:

1. GND is the symbol for signal and supply (power) common for the QSFP+ module. All are common within the QSFP module, and all module voltages are referenced to this potential unless otherwise noted. Connect these directly to the host board signal common ground plane.
2. VccRx, Vcc1, and VccTx are the receiver and transmitter power supplies and shall be applied concurrently. VccRx, Vcc1, and VccTx may be internally connected within the QSFP transceiver module in any combination. The connector pins are each rated for a maximum current of 500mA.

Electrical Pin-Out Details - QSFP

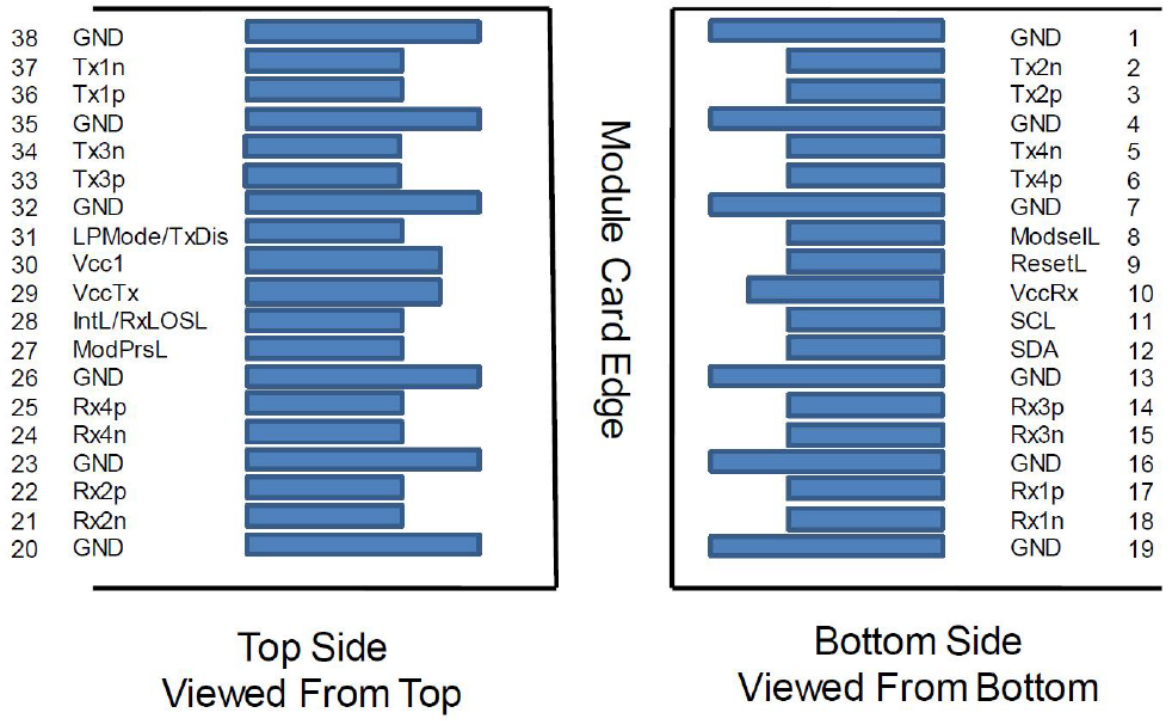

Wiring Table

WIRING DIAGRAM					
P0 END				P1&P2 END	
Pad	Signal		Px	Pad	Signal
1	GND	—		20	GND
2	TX2n	→	P1	21	RX2n
3	TX2p	→		22	RX2p
4	GND	—		20	GND
5	TX4n	→		21	RX2n
6	TX4p	→		22	RX2p
7	GND			23	GND
13	GND		P2	35	GND
14	RX3p	←		36	TX1p
15	RX3n	←		37	TX1n
16	GND	—		38	GND
17	RX1p	←		36	TX1p
18	RX1n	←		37	TX1n
19	GND	—		38	GND
20	GND	—	P1	1	GND
21	RX2n	←		2	TX2n
22	RX2p	←		3	TX2p
23	GND	—		1	GND
24	RX4n	←		2	TX2n
25	RX4p	←		3	TX2p
26	GND			4	GND
32	GND		P2	16	GND
33	TX3p	→		17	RX1p
34	TX3n	→		18	RX1n
35	GND	—		19	GND
36	TX1p	→		17	RX1p
37	TX1n	→	P1	18	RX1n
38	GND	—		19	GND

WIRING DIAGRAM					
P0 END				P3&P4 END	
Pad	Signal		Px	Pad	Signal
39	GND	—		20	GND
40	TX6n	→	P3	21	RX2n
41	TX6p	→		22	RX2p
42	GND	—		20	GND
43	TX8n	→		21	RX2n
44	TX8p	→		22	RX2p
45	GND			23	GND
51	GND		P4	35	GND
52	RX7p	←		36	TX1p
53	RX7n	←		37	TX1n
54	GND	—		38	GND
55	RX5p	←		36	TX1p
56	RX5n	←		37	TX1n
57	GND	—		38	GND
58	GND	—	P3	1	GND
59	RX6n	←		2	TX2n
60	RX6p	←		3	TX2p
61	GND	—		1	GND
62	RX8n	←		2	TX2n
63	RX8p	←		3	TX2p
64	GND			4	GND
70	GND		P4	16	GND
71	TX7p	→		17	RX1p
72	TX7n	→		18	RX1n
73	GND	—		19	GND
74	TX5p	→		17	RX1p
75	TX5n	→	P3	18	RX1n
76	GND	—		19	GND

Mechanical Specifications

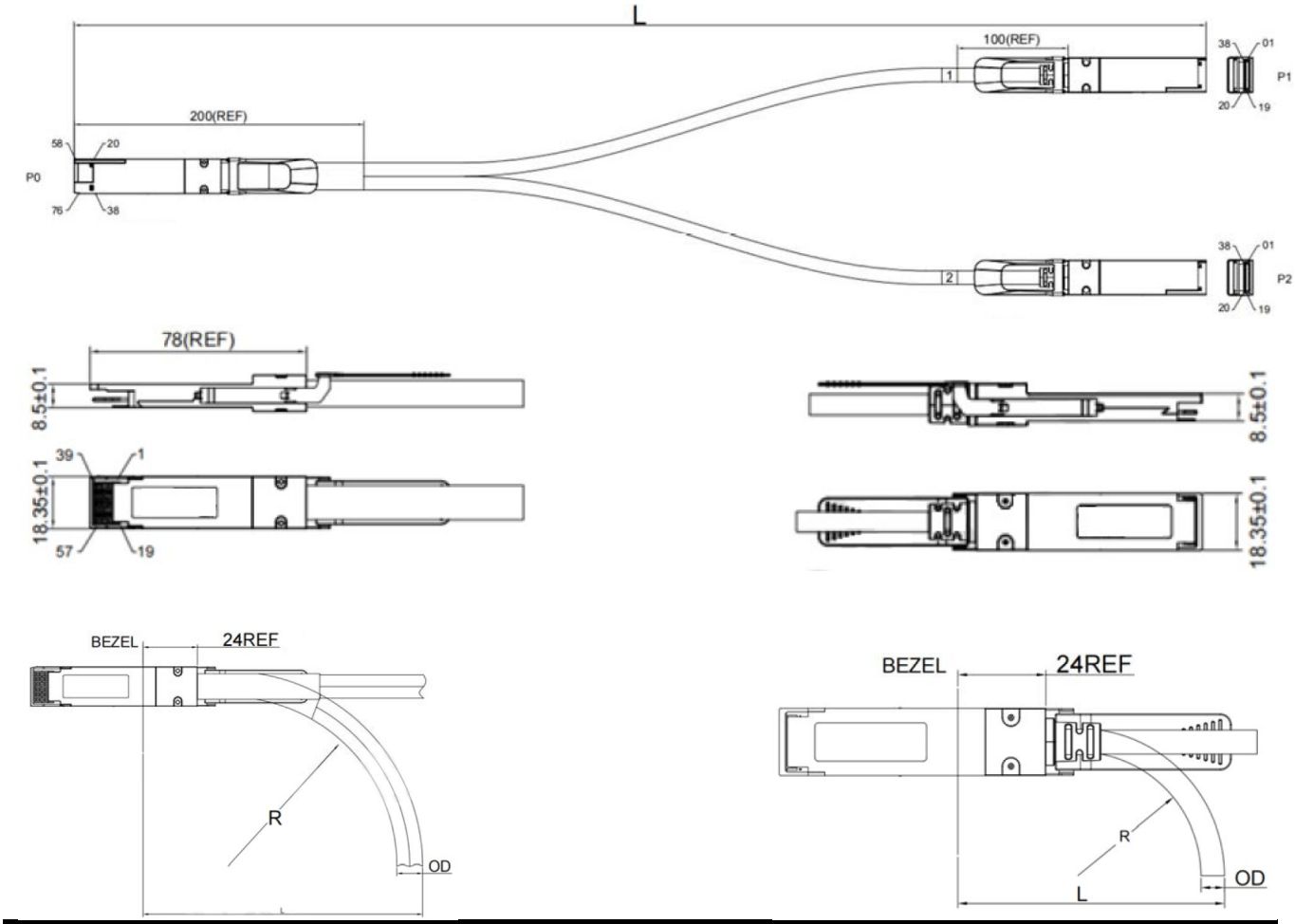

QSFP-DD				QSFP			
Gauge	**OD**	**Bend Radius "R"**	**Min. Bend Radius "L"**	**Gauge**	**OD**	**Bend Radius "R"**	**Min. Bend Radius "L"**
27AWG	17.6MM	88MM	190MM	**27AWG**	8.8MM	44MM	90MM

About Skylane Optics

Skylane is a leading provider of transceivers for optical communication.

We offer an extensive portfolio for the enterprise, access, datacenter and metropolitan fiber optical market as well as for smart home applications and home networks.

We cover the European, South American and North American market with a strong partner network and have offices in Belgium, Brazil, Sweden and USA.

Our offerings are characterized by high quality and performance. In combination with our strong technical support, we enable our customers to build cost optimized network solutions.

We offer an extensive range of high-quality products including transceivers (Optical and copper), Active Optical Cable (AOC), Direct Attach Cable (DAC), Mux/Demux, Coding Box.