QDD-400-CU2M-SKY

Cisco® QDD-400-CU2M Compatible 400GBase-CU QSFP-DD to QSFP-DD PAM-4 Direct Attach Cable (Passive Twinax, 2m)

Product Description

This is a Cisco® QDD-400-CU2M compatible 400GBase-CU QSFP-DD to QSFP-DD PAM-4 direct attach cable that operates over passive copper with a maximum reach of 2.0m (6.6ft). It has been programmed, uniquely serialized, and data-traffic and application tested to ensure it is 100% compliant and functional. This direct attach cable is built to comply with MSA (Multi-Source Agreement) standards. We stand behind the quality of our products and proudly offer a limited lifetime warranty.

Skylane's transceivers are RoHS compliant and lead-free.

Features:

- Compliant to QSFP-DD MSA Standards
- Operating Temperature: 0 to 70 Celsius
- Compliant to IEEE802.3bs
- Built-In EEPROM Functions
- RoHS Compliant and Lead-Free
- Hot-Pluggable

Applications:

- 400GBase Ethernet

For your product safety, please read the following information carefully before any manipulation of the transceiver:

ESD

This transceiver is specified as ESD threshold 1kV for SFI pins and 2kV for all others electrical input pins, tested per MIL-STD-883G, Method 3015.4 /JESD22-A114-A (HBM). However, normal ESD precautions are still required during the handling of this module.

LASER SAFETY

This is a Class1 Laser Product according to IEC 60825-1:2007. This product complies with 21 CFR 1040.10 and 1040.11 except for deviations pursuant to Laser Notice No. 50, dated (June 24, 2007).

The optical ports of the module need to be terminated with an optical connector or with a dust plug in order to avoid contamination.

Absolute Maximum Ratings

Parameter	Symbol	Min.	Typ.	Max.	Unit	Notes
Supply Voltage	Vcc	-0.3	3.3	3.6	V	
Storage Temperature	Tstg	-40		85	ºC	
Operating Case Temperature	Tc	0		70	ºC	
Humidity	RH	5		85	%	
Data Rate			400		Gbps	
Wire Gauge			30		AWG	

Pin Descriptions

Pin	Logic	Symbol	Name/Description	Plug Sequence
1		GND	Module Ground.	1B
2	CML-I	Tx2-	Transmitter Inverted Data Input.	3B
3	CML-I	Tx2+	Transmitter Non-Inverted Data Input.	3B
4		GND	Module Ground.	1B
5	CML-I	Tx4-	Transmitter Inverted Data Input.	3B
6	CML-I	Tx4+	Transmitter Non-Inverted Data Input.	3B
7		GND	Module Ground.	1B
8	LVTTL-I	ModSelL	Module Select.	3B
9	LVTTL-I	ResetL	Module Reset.	3B
10		VccRx	+3.3V Receiver Power Supply.	2B
11	LVCMOS-I/O	SCL	2-Wire Serial Interface Clock.	3B
12	LVCMOS-I/O	SDA	2-Wire Serial Interface Data.	3B
13		GND	Module Ground.	1B
14	CML-O	Rx3+	Receiver Non-Inverted Data Output.	3B
15	CML-O	Rx3-	Receiver Inverted Data Output.	3B
16		GND	Module Ground.	1B
17	CML-O	Rx1+	Receiver Non-Inverted Data Output.	3B
18	CML-O	Rx1-	Receiver Inverted Data Output.	3B
19		GND	Module Ground.	1B
20		GND	Module Ground.	1B
21	CML-O	Rx2-	Receiver Inverted Data Output.	3B
22	CML-O	Rx2+	Receiver Non-Inverted Data Output.	3B
23		GND	Module Ground.	1B
24	CML-O	Rx4-	Receiver Inverted Data Output.	3B
25	CML-O	Rx4+	Receiver Non-Inverted Data Output.	3B
26		GND	Module Ground.	1B
27	LVTTL-O	ModPrsL	Module Present.	3B
28	LVTTL-O	IntL	Interrupt.	3B
29		VccTx	+3.3V Transmitter Power Supply.	2B

30		Vcc1	+3.3V Power Supply.	2B
31	LVTTL-I	InitMode	Initialization Mode. In legacy QSFP applications, the InitMode pad is called LPMode.	3B
32		GND	Module Ground.	1B
33	CML-I	Tx3+	Transmitter Non-Inverted Data Input.	3B
34	CML-I	Tx3-	Transmitter Inverted Data Input.	3B
35		GND	Module Ground.	1B
36	CML-I	Tx1+	Transmitter Non-Inverted Data Input.	3B
37	CML-I	Tx1-	Transmitter Inverted Data Input.	3B
38		GND	Module Ground.	1B
39		GND	Module Ground.	1A
40	CML-I	Tx6-	Transmitter Inverted Data Input.	3A
41	CML-I	Tx6+	Transmitter Non-Inverted Data Input.	3A
42		GND	Module Ground.	1A
43	CML-I	Tx8-	Transmitter Inverted Data Input.	3A
44	CML-I	Tx8+	Transmitter Non-Inverted Data Input.	3A
45		GND	Module Ground.	1A
46		OPEN		3A
47		OPEN		3A
48		OPEN		2A
49		OPEN		3A
50		OPEN		3A
51		GND		1A
52	CML-O	Rx7+	Receiver Non-Inverted Data Output.	3A
53	CML-O	Rx7-	Receiver Inverted Data Output.	3A
54		GND	Module Ground.	1A
55	CML-O	Rx5+	Receiver Non-Inverted Data Output.	3A
56	CML-O	Rx5-	Receiver Inverted Data Output.	3A
57		GND	Module Ground.	1A
58		GND	Module Ground.	1A
59	CML-O	Rx6-	Receiver Inverted Data Output.	3A
60	CML-O	Rx6+	Receiver Non-Inverted Data Output.	3A
61		GND	Module Ground.	1A
62	CML-O	Rx8-	Receiver Inverted Data Output.	3A
63	CML-O	Rx8+	Receiver Non-Inverted Data Output.	3A
64		GND	Module Ground.	1A
65		OPEN	Not Connected.	3A
66		OPEN	For Future Use.	3A
67		OPEN	+3.3V Transmitter Power Supply.	2A
68		OPEN	+3.3V Power Supply.	2A
69		OPEN	For Future Use.	3A
70		GND	Module Ground.	1A
71	CML-I	Tx7+	Transmitter Non-Inverted Data Input.	3A
72	CML-I	Tx7-	Transmitter Inverted Data Input.	3A

73		GND	Module Ground.	1A
74	CML-I	Tx5+	Transmitter Non-Inverted Data Input.	3A
75	CML-I	Tx5-	Transmitter Inverted Data Input.	3A
76		GND	Module Ground.	1A

Wiring Diagram

LOW SPEED SIGNALS P1 &P2	
PAD	SIGNAL
8	MODSELL
9	RESETL
10	VCCRX
11	SCL
12	SDA
27	MODPRSL
28	INTL
29	VCCTX
30	VCC1
31	INIT_MODE
46	OPEN
47	OPEN
48	OPEN
49	OPEN
50	OPEN
65	OPEN
66	OPEN
67	OPEN
68	OPEN
69	OPEN

WIRING DIAGRAM				
P1 END			P2 END	
Pad	Signal		Pad	Signal
1	GND	—	20	GND
2	TX2n	→	21	RX2n
3	TX2p	→	22	RX2p
4	GND	—	23	GND
5	TX4n	→	24	RX4n
6	TX4p	→	25	RX4p
7	GND	—	26	GND
13	GND	—	32	GND
14	RX3p	←	33	TX3p
15	RX3n	←	34	TX3n
16	GND	—	35	GND
17	RX1p	←	36	TX1p
18	RX1n	←	37	TX1n
19	GND	—	38	GND
20	GND	—	1	GND
21	RX2n	←	2	TX2n
22	RX2p	←	3	TX2p
23	GND	—	4	GND
24	RX4n	←	5	TX4n
25	RX4p	←	6	TX4p
26	GND	—	7	GND
32	GND	—	13	GND
33	TX3p	→	14	RX3p
34	TX3n	→	15	RX3n
35	GND	—	16	GND
36	TX1p	→	17	RX1p
37	TX1n	→	18	RX1n
38	GND	—	19	GND

WIRING DIAGRAM				
P1 END			P2 END	
Pad	Signal		Pad	Signal
39	GND	—	58	GND
40	TX6n	→	59	RX6n
41	TX6p	→	60	RX6p
42	GND	—	61	GND
43	TX8n	→	62	RX8n
44	TX8p	→	63	RX8p
45	GND	—	64	GND
51	GND	—	70	GND
52	RX7p	←	71	TX7p
53	RX7n	←	72	TX7n
54	GND	—	73	GND
55	RX5p	←	74	TX5p
56	RX5n	←	75	TX5n
57	GND	—	76	GND
58	GND	—	39	GND
59	RX6n	←	40	TX6n
60	RX6p	←	41	TX6p
61	GND	—	42	GND
62	RX8n	←	43	TX8n
63	RX8p	←	44	TX8p
64	GND	—	45	GND
70	GND	—	51	GND
71	TX7p	→	52	RX7p
72	TX7n	→	53	RX7n
73	GND	—	54	GND
74	TX5p	→	55	RX5p
75	TX5n	→	56	RX5n
76	GND	—	57	GND

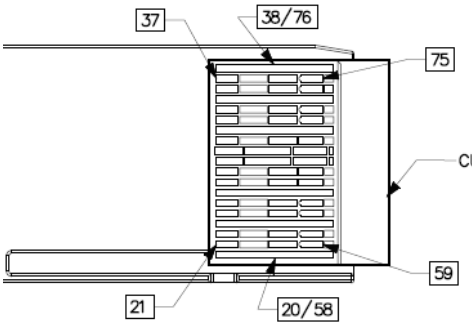

TOP VIEW

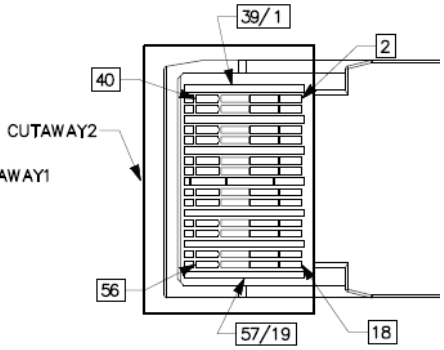

BOTTOM VIEW

Mechanical Specifications

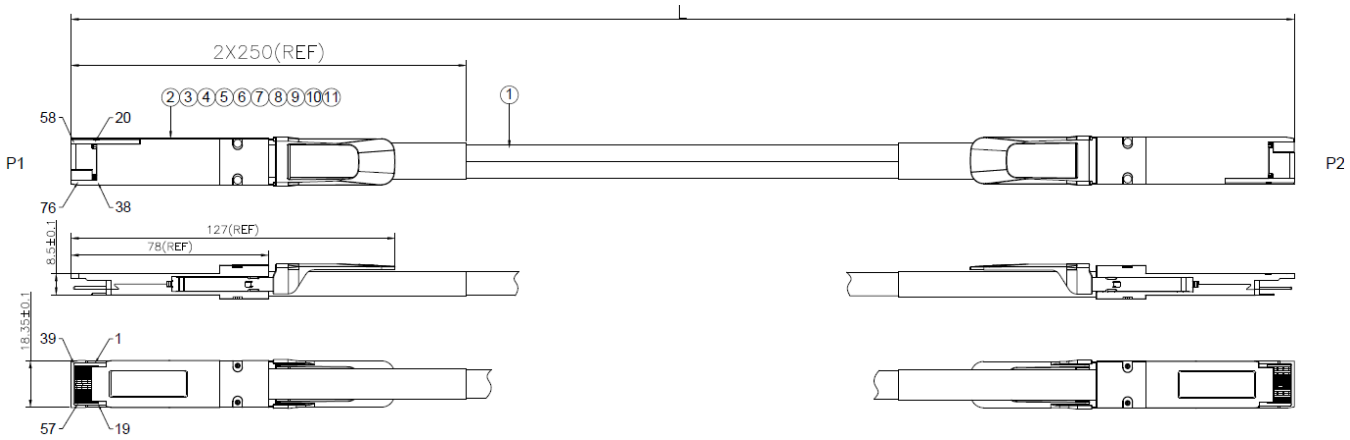

Item	Name	Description	Quantity
1	Raw Cable	8 Pairs, PVC Jacket, Black	A/R
2	PCBA	PCB, 76P, Au 30u" Minimum	2
3	Top Shell	Zinc Alloy, Plated Nickel Over Copper	2
4	Bottom Shell	Zinc Alloy, Plated Nickel Over Copper	2
5	Pull Tab	Pull Tab, TPV, Black	2
6	Rivet	Aluminum Alloy	4
7	Spring	Stainless Steel	4
8	Blackshell Label	Blackshell Label	2
9	Inner Mold	Hot-Melt Glue	A/R
10	Copper Tape	T=0.15MM	A/R
11	Heat Shrinkable Tube	Black Tube	A/R

Notes:

1. Raw cable impedance: $100^{+10}_{-5}\Omega$. Mated connector impedance: $100^{+10}_{-15}\Omega$. Rise time: 25ps (20-80%).
2. 100% conductor test. Test condition: voltage 5V. Insulation resistance: 10mΩ. Conduction resistance maximum: 3Ω.
3. High-frequency test according to IEEE802.3cd standard.
4. All materials are RoHS complaint.

About Skylane Optics

Skylane is a leading provider of transceivers for optical communication.

We offer an extensive portfolio for the enterprise, access, datacenter and metropolitan fiber optical market as well as for smart home applications and home networks.

We cover the European, South American and North American market with a strong partner network and have offices in Belgium, Brazil, Sweden and USA.

Our offerings are characterized by high quality and performance. In combination with our strong technical support, we enable our customers to build cost optimized network solutions.

We offer an extensive range of high-quality products including transceivers (Optical and copper), Active Optical Cable (AOC), Direct Attach Cable (DAC), Mux/Demux, Coding Box.