Q400G-4Q56G-AOC1-5M-SKY

MSA Compliant 400GBase-AOC QSFP-DD to 4xQSFP56 PAM-4 Active Optical Cable (850nm, MMF, 1.5m)

Product Description

This is an MSA compliant 400GBase-AOC QSFP-DD to 4xQSFP56 active optical cable that operates over multi-mode fiber with a maximum reach of 1.5m (4.9ft). At a wavelength of 850nm, it has been programmed, uniquely serialized, and data-traffic and application tested to ensure it is 100% compliant and functional. This active optical cable is built to comply with MSA (Multi-Source Agreement) standards. We stand behind the quality of our products and proudly offer a limited lifetime warranty.

Skylane's transceivers are RoHS compliant and lead-free.

Features:

- Low latency DSP-free electronics-based CDR
- PAM4 modulation
- Multi-data rate up to 56.15 Gb/s per lane
- Low power consumption: 7.6W on 400G end, 2.3W on 100G end with all CDRs enabled
- QSFP-DD MSA compliant
- Single 3.3 V power supply
- Commercial temperature 0 to 70 Celsius
- CMIS 4.0 compliant
- RoHS compliant and lead-free
- Hot pluggable
- LSZH-rated cable
- IEEE 802.3cm

Applications:

- 400GBase Ethernet
- Data center: Switches, servers, storages and NIC adapters

For your product safety, please read the following information carefully before any manipulation of the transceiver:

ESD

This transceiver is specified as ESD threshold 1kV for SFI pins and 2kV for all others electrical input pins, tested per MIL-STD-883G, Method 3015.4 /JESD22-A114-A (HBM). However, normal ESD precautions are still required during the handling of this module.

LASER SAFETY

This is a Class1 Laser Product according to IEC 60825-1:2007. This product complies with 21 CFR 1040.10 and 1040.11 except for deviations pursuant to Laser Notice No. 50, dated (June 24, 2007).

The optical ports of the module need to be terminated with an optical connector or with a dust plug in order to avoid contamination.

Absolute Maximum Ratings

Parameter	Symbol	Min.	Typ.	Max.	Unit	Notes
Supply Voltage	VIN	0		4.0	V	
Input Swing	VIN-MAX			1500	mVpp	
Storage Temperature	TSTG	–40		85	°C	Ambient
Operating Case Temperature	Top	0		70	°C	
Relative Humidity	RH	5		85	%	

Electrical Specifications

Parameter		Symbol	Min.	Typ.	Max.	Unit	Notes
Data Rate (Per Channel)		BR		26.5625		GBd	
Power Supply Voltage		VCC	3.15	3.30	3.47	V	
Power Supply Current	400G End	ICC		2300	2500	mA	1
	100G End	ICC		680	750	mA	1
Power Consumption	400G End	P		7.6	8.0	W	1
	100G End	P		2.3	2.5	W	1
Transmitter							
Input Differential Impedance		RIN		100		Ω	
Diff. Pk-Pk Input Vol. Tolerance		VINP-P	900			mV	
Receiver							
Output Differential Impedance		ROUT		100		Ω	
Differential Data Output Swing		VOUTP-P	700	800	900	mV	
Bit Error Ratio (at 26.5625 GBd)					2.4×10-4		3

Notes:

1. Per end, all channel CDRs are enabled.
2. Pre-FEC Bit Error Ratio with a PRBS 231 – 1 test pattern over a normal operating temperature range.

Pin Descriptions (QSFP-DD 400G End)

PIN	Logic	Symbol	Description	Notes
1		GND	Ground	1
2	CML-I	Tx2n	Transmitter Inverted Data Input	
3	CML-I	Tx2p	Transmitter Non-Inverted Data Input	
4		GND	Ground	1
5	CML-I	Tx4n	Transmitter Inverted Data Input	
6	CML-I	Tx4p	Transmitter Non-Inverted Data Input	
7		GND	Ground	1
8	LVTTL-I	ModSelL	Module Select	
9	LVTTL-I	ResetL	Module Reset	
10		VccRx	+3.3V Power Supply Receiver	2
11	LVCMOS-I/O	SCL	2-wire serial interface clock	
12	LVCMOS-I/O	SDA	2-wire serial interface data	
13		GND	Ground	1
14	CML-O	Rx3p	Receiver Non-Inverted Data Output	
15	CML-O	Rx3n	Receiver Inverted Data Output	
16		GND	Ground	1
17	CML-O	Rx1p	Receiver Non-Inverted Data Output	
18	CML-O	Rx1n	Receiver Inverted Data Output	
19		GND	Ground	1
20		GND	Ground	1
21	CML-O	Rx2n	Receiver Inverted Data Output	
22	CML-O	Rx2p	Receiver Non-Inverted Data Output	
23		GND	Ground	1
24	CML-O	Rx4n	Receiver Inverted Data Output	
25	CML-O	Rx4p	Receiver Non-Inverted Data Output	
26		GND	Ground	1
27	LVTTL-O	ModPrsL	Module Present	
28	LVTTL-O	IntL	Interrupt	
29		VccTx	+3.3V Power Supply Transmitter	2
30		Vccl	+3.3V Power Supply	2
31	LVTTL-I	InitMode	Initialization mode; In legacy QSFP applications, the InitMode pad is called LPMODE	
32		GND	Ground	1
33	CML-I	Tx3p	Transmitter Non-Inverted Data Input	
34	CML-I	Tx3n	Transmitter Inverted Data Input	
35		GND	Ground	1
36	CML-I	Tx1p	Transmitter Non-Inverted Data Input	
37	CML-I	Tx1n	Transmitter Inverted Data Input	
38		GND	Ground	1

PIN		Symbol	Description	Notes
39		GND	Ground	1
40	CML-I	Tx6n	Transmitter Inverted Data Input	
41	CML-I	Tx6p	Transmitter Non-Inverted Data Input	
42		GND	Ground	1
43	CML-I	Tx8n	Transmitter Inverted Data Input	
44	CML-I	Tx8p	Transmitter Non-Inverted Data Input	
45		GND	Ground	1
46		Reserved	For future use	3
47		VSl	Module Vendor Specific 1	3
48		VccRx1	3.3V Power Supply	2
49		VS2	Module Vendor Specific 2	3
50		VS3	Module Vendor Specific 3	3
51		GND	Ground	1
52	CML-O	Rx7p	Receiver Non-Inverted Data Output	
53	CML-O	Rx7n	Receiver Inverted Data Output	
54		GND	Ground	1
55	CML-O	Rx5p	Receiver Non-Inverted Data Output	
56	CML-O	Rx5n	Receiver Inverted Data Output	
57		GND	Ground	1
58		GND	Ground	1
59	CML-O	Rx6n	Receiver Inverted Data Output	
60	CML-O	Rx6p	Receiver Non-Inverted Data Output	
61		GND	Ground	1
62	CML-O	Rx8n	Receiver Inverted Data Output	
63	CML-O	Rx8p	Receiver Non-Inverted Data Output	
64		GND	Ground	1
65		NC	No Connect	3
66		Reserved	For future use	3
67		VccTx1	3.3V Power Supply	2
68		Vcc2	3.3V Power Supply	2
69		Reserved	For future use	3
70		GND	Ground	1
71	CML-I	Tx7p	Transmitter Non-Inverted Data Input	
72	CML-I	Tx7n	Transmitter Inverted Data Input	
73		GND	Ground	1
74	CML-I	Tx5p	Transmitter Non-Inverted Data Input	
75	CML-I	Tx5n	Transmitter Inverted Data Input	
76		GND	Ground	1

Notes:

1. QSFP-DD uses common ground (GND)for all signals and supply (power). All are common within the QSFP-DD module and all module voltages are referenced to this potential unless otherwise noted. Connect these directly to the host board signal-common ground plane.
2. VccRx, VccRx1, Vcc1, Vcc2, VccTx and VccTx1 shall be applied concurrently. Requirements defined for the host side of the Host Card Edge Conn\ector are listed in Table 6. VccRx, VccRx1, Vcc1, Vcc2, VccTx and VccTx1 may be internally connected within the module in any combination. The connector Vcc pins are each rated for a maximum current of 1000 mA.
3. All Vendor Specific, Reserved and No Connect pins may be terminated with 50 ohms to ground on the host. Pad 65 (No Connect) shall be left unconnected within the module. Vendor specific and Reserved pads shall have an impedance to GND that is greater than 10 kOhms and less than 100 pF.
4. Plug Sequence specifies the mating sequence of the host connector and module. The sequence is 1A, 2A, 3A, 1B, 2B, 3B. (see Figure 2 for pad locations) Contact sequence A will make, then break contact with additional QSFP-DD pads. Sequence 1A, 1B will then occur simultaneously, followed by 2A, 2B, followed by 3A,3B.

Electrical Pin-out Details (QSFP-DD 400G End)

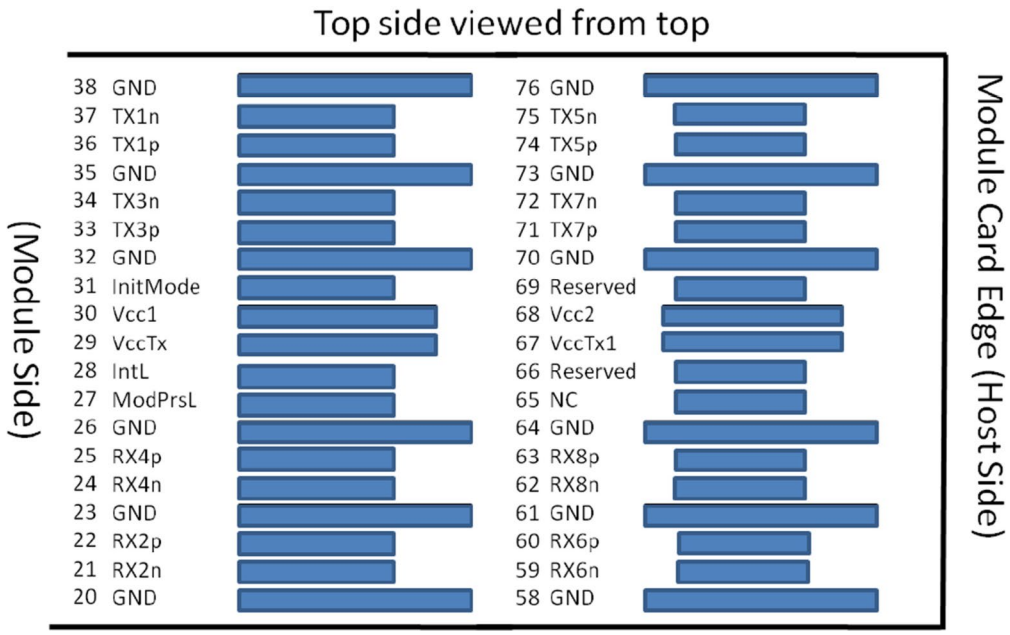

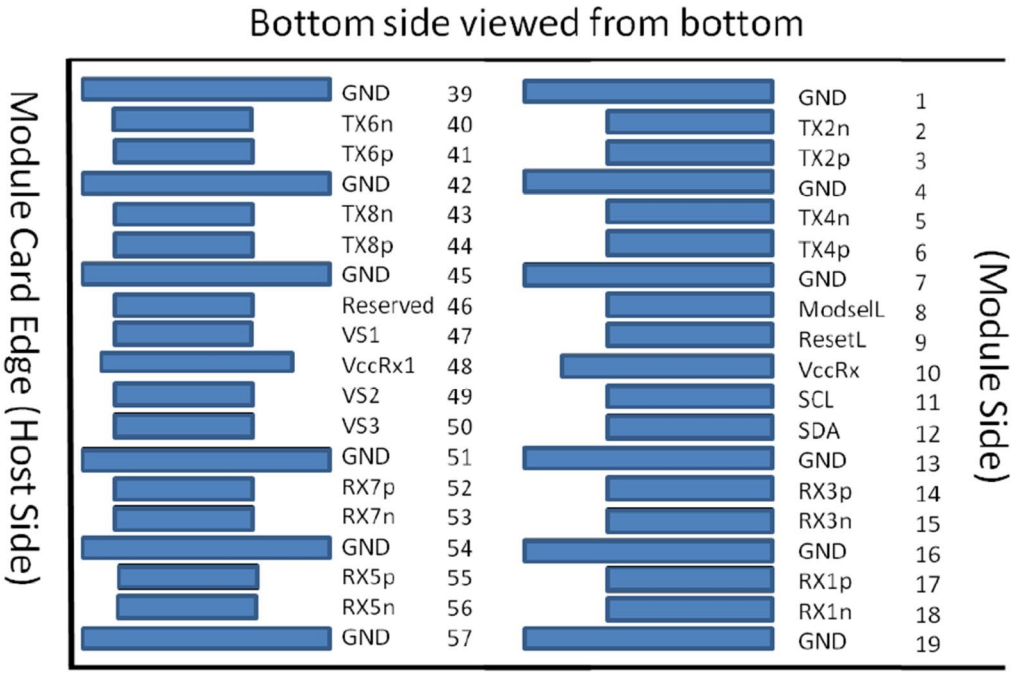

Pin Descriptions (QSFP56 100G End)

PIN	Logic	Symbol	Description	Notes
1		GND	Ground	1
2	CML-I	Tx2n	Transmitter Inverted Data Input	
3	CML-I	Tx2p	Transmitter Non-Inverted Data Input	
4		GND	Ground	1
5	CML-I	Tx4n	Transmitter Inverted Data Input	3
6	CML-I	Tx4p	Transmitter Non-Inverted Data Input	3
7		GND	Ground	1
8	LVTTL-I	ModSelL	Module Select	
9	LVTTL-I	ResetL	Module Reset	
10		Vcc Rx	+3.3V Power supply receiver	2
11	LVCMOS-I/O	SCL	2-wire serial interface clock	
12	LVCMOS-I/O	SDA	2-wire serial interface data	
13		GND	Ground	1
14	CML-O	Rx3p	Receiver Non-Inverted Data Output	3
15	CML-O	Rx3n	Receiver Inverted Data Output	3
16		GND	Ground	1
17	CML-O	Rx1p	Receiver Non-Inverted Data Output	
18	CML-O	Rx1n	Receiver Inverted Data Output	
19		GND	Ground	1
20		GND	Ground	1
21	CML-O	Rx2n	Receiver Inverted Data Output	
22	CML-O	Rx2p	Receiver Non-Inverted Data Output	
23		GND	Ground	1
24	CML-O	Rx4n	Receiver Inverted Data Output	3
25	CML-O	Rx4p	Receiver Non-Inverted Data Output	3
26		GND	Ground	1
27	LVTTL-O	ModPrsL	Module Present	
28	LVTTL-O	IntL	Interrupt	
29		Vcc Tx	+3.3V Power supply transmitter	2
30		Vcc 1	+3.3V Power Supply	2
31	LVTTL-I	LPMode	Low Power Mode	
32		GND	Ground	1
33	CML-I	Tx3p	Transmitter Non-Inverted Data Input	3
34	CML-I	Tx3n	Transmitter Inverted Data Input	3
35		GND	Ground	1
36	CML-I	Tx1p	Transmitter Non-Inverted Data Input	
37	CML-I	Tx1n	Transmitter Inverted Data Input	
38		GND	Ground	1

Notes:

1. GND is the symbol for signal and supply (power) common for the QSFP module. All are common within the QSFP module and all module voltages are referenced to this potential unless otherwise noted. Connect these directly to the host board signal-common ground plane.
2. Vcc Rx, Vcc1 and Vcc Tx are the receiver and transmitter power supplies and shall be applied concurrently. Vcc Rx, Vcc1 and Vcc Tx may be internally connected within the QSFP transceiver module in any combination. The connector pins are each rated for a maximum current of 500 mA.
3. Not used

Electrical Pin-out Details (QSFP56 100G End)

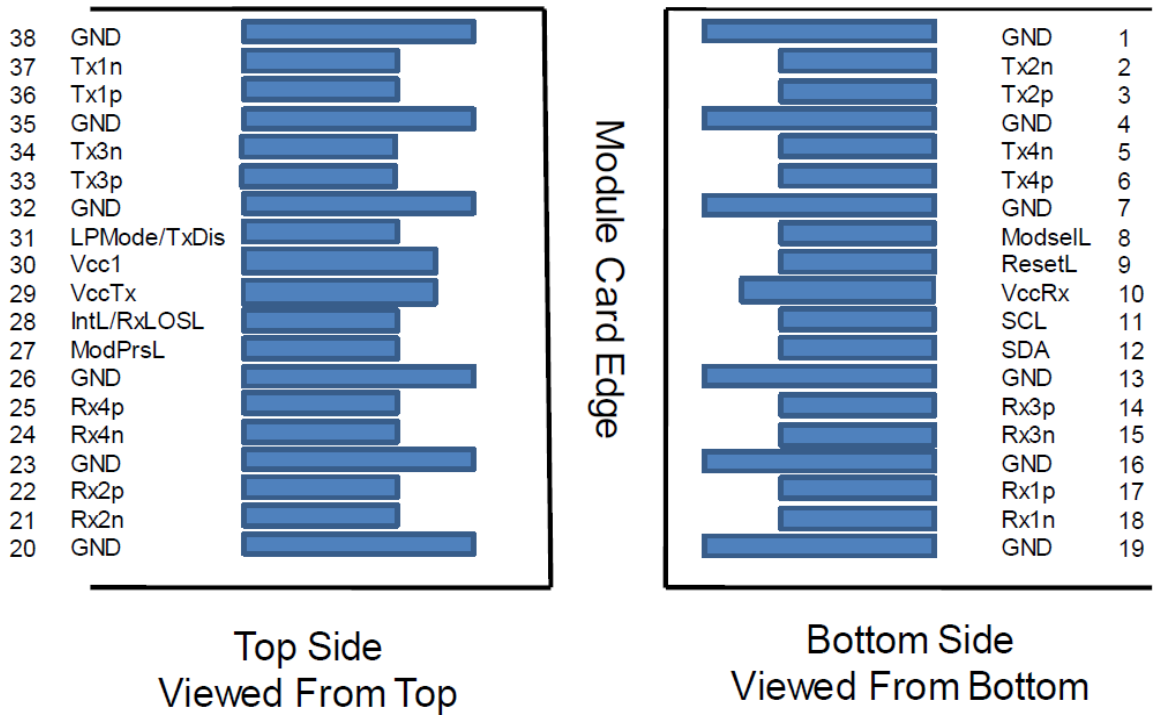

Block Diagram

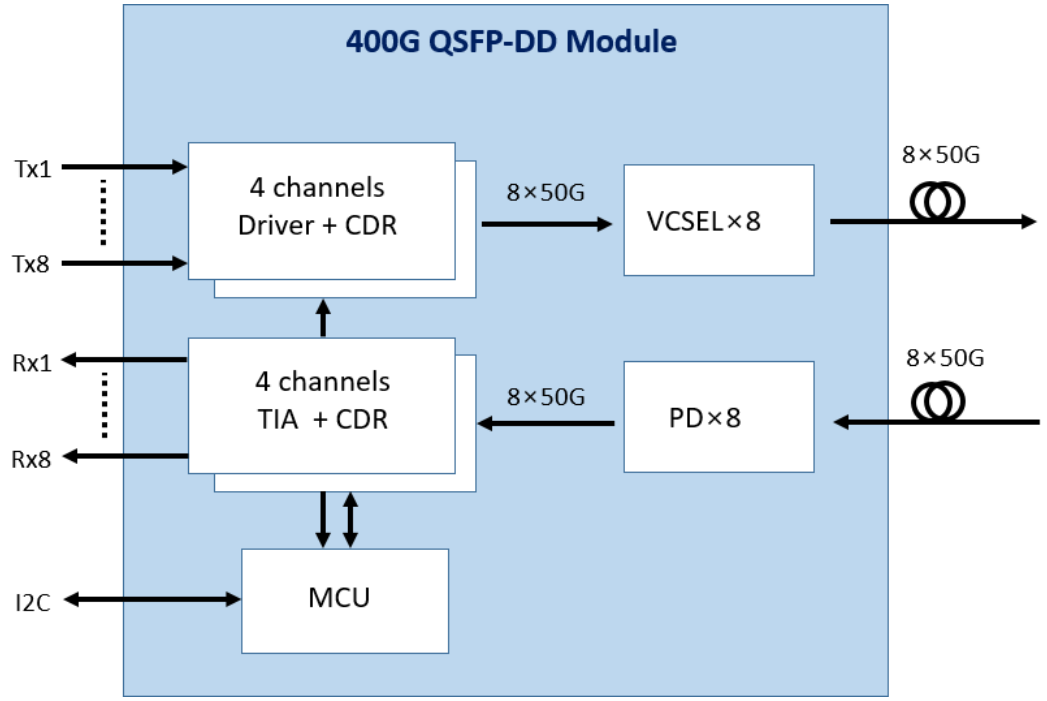

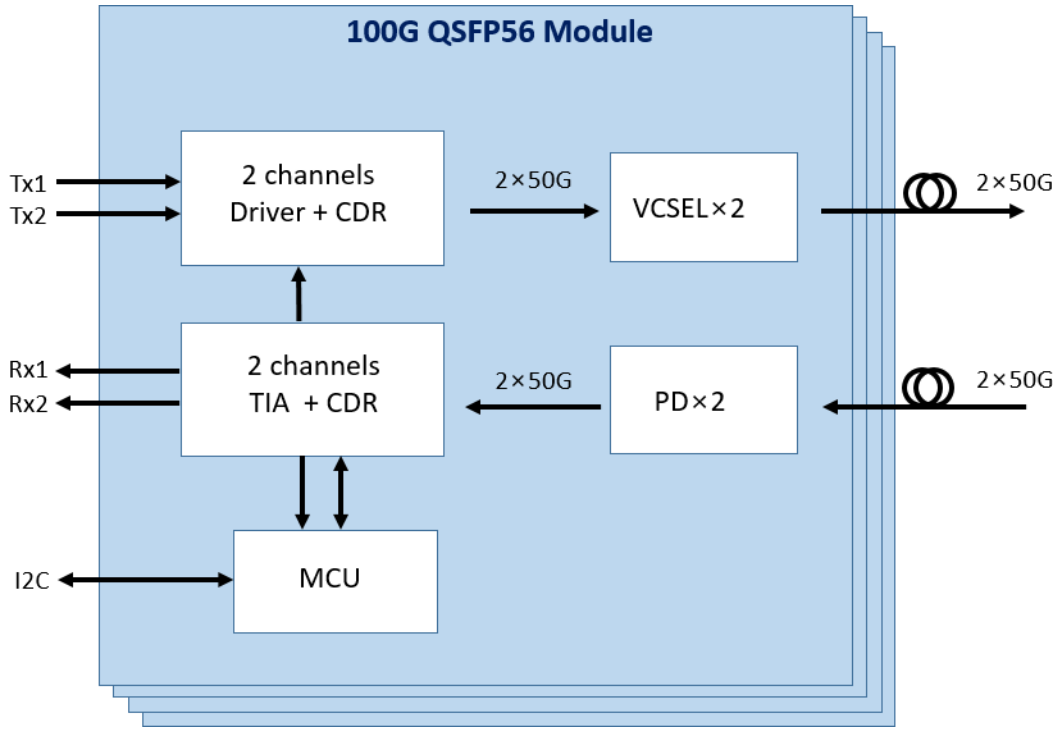

Active Optical Cable Specifications

Parameter	Value	Unit	Note
Cable Diameter	LSZH: Ø3.0 ± 0.15	mm	
Minimum Bend Radius	30	mm	Without tension
Length Tolerance	+300 / –0	mm	
Cable Jacket	LSZH, Aqua		

Mechanical Specifications

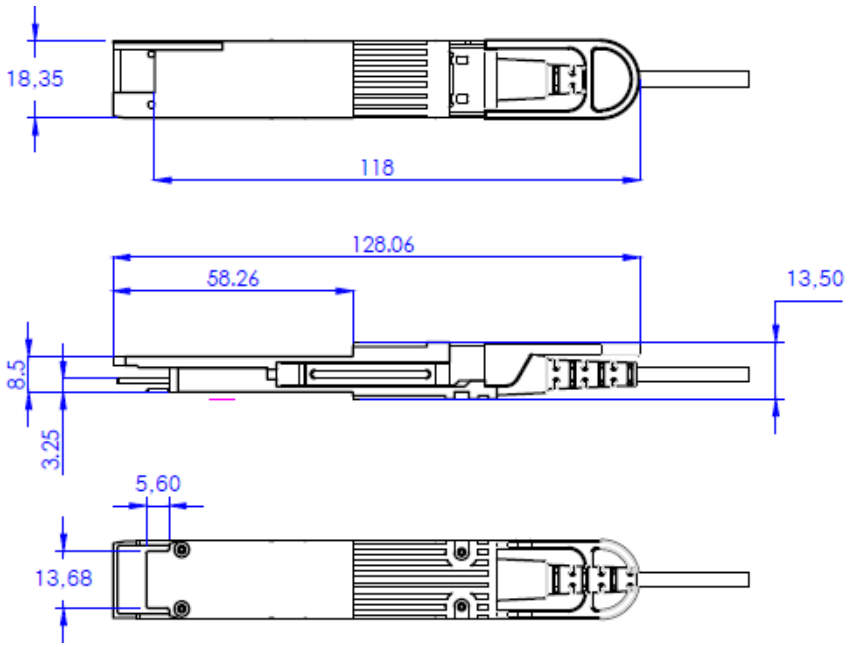

QSFP-DD 400G End

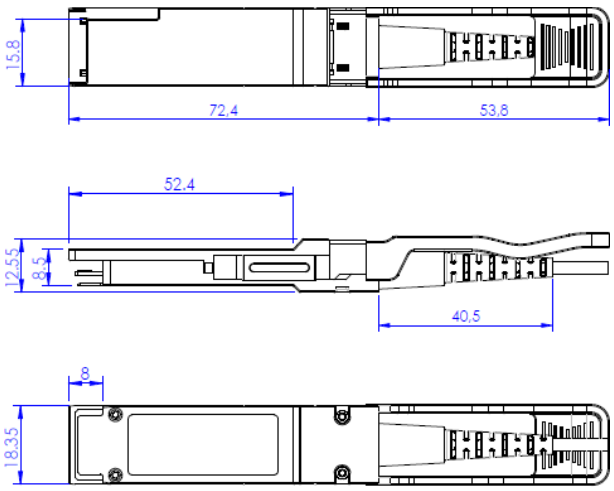

QSFP56 100G End

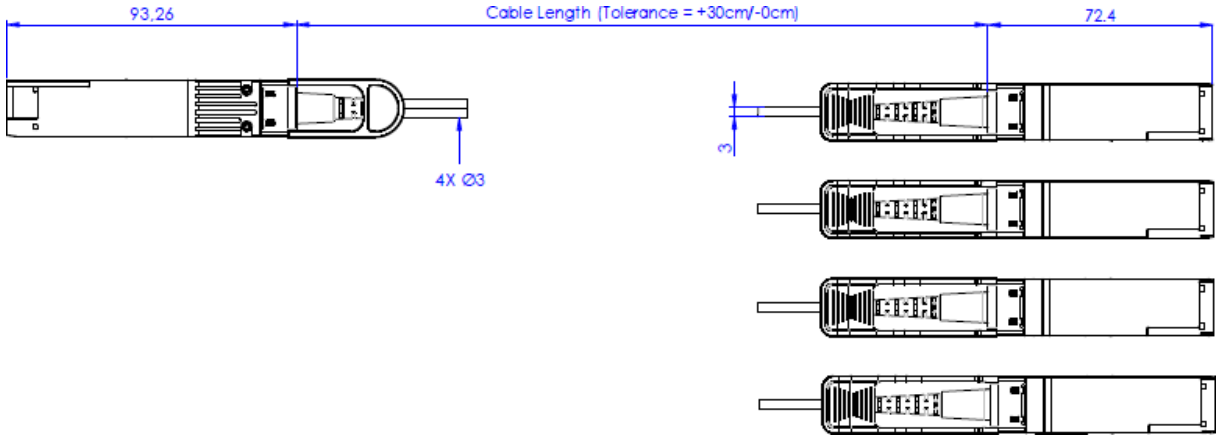

About Skylane Optics

Skylane is a leading provider of transceivers for optical communication.

We offer an extensive portfolio for the enterprise, access, datacenter and metropolitan fiber optical market as well as for smart home applications and home networks.

We cover the European, South American and North American market with a strong partner network and have offices in Belgium, Brazil, Sweden and USA.

Our offerings are characterized by high quality and performance. In combination with our strong technical support, we enable our customers to build cost optimized network solutions.

We offer an extensive range of high-quality products including transceivers (Optical and copper), Active Optical Cable (AOC), Direct Attach Cable (DAC), Mux/Demux, Coding Box.