Q2C31P50C00FUBI

Ubiquiti® Compatible 100GBase-DR QSFP28 Single Lambda Transceiver (SMF, 1310nm, 500m, LC, DOM, with FEC)

Product Description

This Ubiquiti® compatible QSFP28 transceiver provides 100GBase-DR throughput up to 500m over single-mode fiber (SMF) using a wavelength of 1310nm via an LC connector. It is guaranteed to be 100% compatible with the equivalent Ubiquiti® transceiver. This easy to install, hot swappable transceiver has been programmed, uniquely serialized and data-traffic and application tested to ensure that it will initialize and perform identically. Digital optical monitoring (DOM) support is also present to allow access to real-time operating parameters. We stand behind the quality of our products and proudly offer a limited lifetime warranty.

Skylane's transceivers are RoHS compliant and lead-free.

Features:

- SFF-8665 Compliance
- Duplex LC Connector
- Commercial Temperature 0 to 70 Celsius
- Single-mode Fiber
- Hot Pluggable
- Excellent ESD Protection
- Metal with Lower EMI
- RoHS Compliant and Lead Free

Applications:

- 100GBase-DR Ethernet
- Access and Enterprise

For your product safety, please read the following information carefully before any manipulation of the transceiver:

ESD

This transceiver is specified as ESD threshold 1kV for SFI pins and 2kV for all others electrical input pins, tested per MIL-STD-883G, Method 3015.4 /JESD22-A114-A (HBM). However, normal ESD precautions are still required during the handling of this module.

LASER SAFETY

This is a Class1 Laser Product according to IEC 60825-1:2007. This product complies with 21 CFR 1040.10 and 1040.11 except for deviations pursuant to Laser Notice No. 50, dated (June 24, 2007).

The optical ports of the module need to be terminated with an optical connector or with a dust plug in order to avoid contamination.

Absolute Maximum Ratings

Parameter	Symbol	Min.	Typ.	Max.	Unit	Notes
Maximum Supply Voltage	Vcc	-0.5		3.6	V	
Storage Temperature	TS	-40		+85	°C	
Operating Case Temperature	Tc	0		70	°C	
Relative Humidity (non-condensing)	RH	0		85	%	
Damage Threshold	THd	5			dBm	
Electrical Data Rate, each Lane (NRZ)			25.78125		Gb/s	
Optical Data Rate (PAM4)			53.125		GBd	
Data Rate Accuracy		-100		100	ppm	
Pre-FEC Bit Error Ratio				$2.4x10^{-4}$		
Post-FEC Bit Error Ratio				$1x10^{-12}$		1
Control Input Voltage High		2		Vcc	V	
Control Input Voltage Low		0		0.8	V	
Link Distance with G.652	D	2		500	m	2

Notes:

1. FEC feature is embedded in the module.
2. FEC required to be turned on to support maximum transmission distance.

Electrical Characteristics

Parameter	Symbol	Min.	Typ.	Max.	Unit	Notes
Power Supply Voltage	Vcc	3.135	3.3	3.465	V	
Power Consumption				4.5	W	
Supply Current	Icc			1.36	A	
Transmitter (Each Lane)						
Overload Differential Voltage pk-pk	TP1a	900			mV	
Common Mode Voltage (Vcm)	TP1	-350		2850	mV	1
Differential Termination Resistance Mismatch	TP1			10	%	At 1MHz
Differential Return Loss (SDD11)	TP1			See CEI- 28G-VSR Equation 13-19	dB	
Common Mode to Differential Conversion and Differential to Common Mode Conversion (SDC11, SCD11)	TP1			See CEI- 28G-VSR Equation 13-20	dB	
Stressed Input Test	TP1a	See CEI- 28G-VSR Section 3.3.11.2.1				
Receiver (Each Lane)						
Differential Voltage, pk-pk	TP4			900	mV	
Common Mode Voltage (Vcm)	TP4	-350		2850	mV	1
Common Mode Noise, RMS	TP4			17.5	mV	
Differential Termination Resistance Mismatch	TP4			10	%	At 1MHz
Differential Return Loss (SDD22)	TP4			See CEI- 28G-VSR Equation 13-19	dB	
Common Mode to Differential Conversion and Differential to Common Mode Conversion (SDC22, SCD22)	TP4			See CEI- 28G-VSR Equation 13-21	dB	
Common Mode Return Loss (SCC22)	TP4			-2	dB	2
Transition Time, 20 to 80%	TP4	9.5			ps	
Vertical Eye Closure (VEC)	TP4			5.5	dB	
Eye Width at 10^{-15} probability (EW15)	TP4	0.57			UI	
Eye Height at 10^{-15} probability (EH15)	TP4	228			mV	

Notes:

1. Vcm is generated by the host. Specification includes effects of ground offset voltage.
2. From 250MHz to 30GHz.

Optical Characteristics

Parameter	Symbol	Min.	Typ.	Max.	Unit	Notes
Transmitter						
Center Wavelength	λt	1304.5		1317.5	nm	
Side Mode Suppression Ratio	SMSR	30			dB	
Average Launch Power	P_{AVG}	-2.9		4	dBm	1
Outer Optical Modulation Amplitude (OMA_{outer})	P_{OMA}	-0.8		4.2	dBm	2
Launch Power in OMA_{outer} minus TDECQ **for ER ≥ 5dB** **for ER < 5dB**		 -2.2 -1.9			dBm	
Transmitter and Dispersion Eye Closure for PAM4 (TDECQ)	TDECQ			3.4	dB	
TDECQ – 10*$\log_{10}(C_{eq})$				3.4	dB	3
Extinction Ratio	ER	3.5			dB	
RIN15.5OMA	RIN			-136	dB/Hz	
Optical Return Loss Tolerance	TOL			15.5	dB	
Transmitter Reflectance	R_T			-26	dB	
Transmitter Transition Time				17	ps	
Average Launch Power of OFF Transmitter	Poff			-15	dBm	
Receiver						
Center Wavelength	λr	1304.5		1317.5	nm	
Damage Threshold	TH_d	5			dBm	4
Average Receive Power		-5.9		4	dBm	5
Receive Power (OMA_{outer})				4.2	dBm	
Receiver Sensitivity (OMA_{outer})	SEN			Equation (1)	dBm	6
Stressed Receiver Sensitivity (OMA_{outer})	SRS			-1.9	dBm	7
Receiver Reflectance	R_R			-26	dB	
LOS Assert	LOSA	-15			dBm	
LOS Deassert	LOSD			-8.9	dBm	
LOS Hysteresis	LOSH	0.5			dB	
Conditions of Stress Receiver Sensitivity Test (Note 8)						
Stressed Eye Closure for PAM4 (SECQ)			3.4		dB	
SECQ – 10*$\log_{10}(C_{eq})$				3.4	dB	

Notes:

1. Average launch power (min) is informative and not the principal indicator of signal strength. A transmitter with launch power below this value cannot be compliant; however, a value above this does not ensure compliance.
2. Even if the TDECQ < 1.4dB for an extinction ratio of ≥ 5dB or TDECQ < 1.1dB for an extinction ratio of < 5dB, the OMAouter (min) must exceed the minimum value specified here.
3. Ceq is a coefficient defined in IEEE Std 802.3-2018 clause 121.8.5.3 which accounts for reference equalizer noise enhancement.
4. Average receive power (min) is informative and not the principal indicator of signal strength. A received power below this value cannot be compliant; however, a value above this does not ensure compliance.
5. The receiver shall be able to tolerate, without damage, continuous exposure to a modulated optical input signal having this power level on one lane. The receiver does not have to operate correctly at this input power.
6. Receiver sensitivity (OMAouter) (max) is informative and is defined for a transmitter with a value of SECQ up to 3.4 dB. It should meet Equation (1), which is illustrated in the figure below.

$$RRRR = \max(-3.9, RRSSSSSS - 5.3)\ dddddd \qquad (1)$$

Where:

RS is the receiver sensitivity, and
SECQ is the SECQ of the transmitter used to measure the receiver sensitivity.

7. Measured with conformance test signal at TP3 for the BER equal to 2.4x10-4.
8. These test conditions are for measuring stressed receiver sensitivity. They are not characteristics of the receiver.

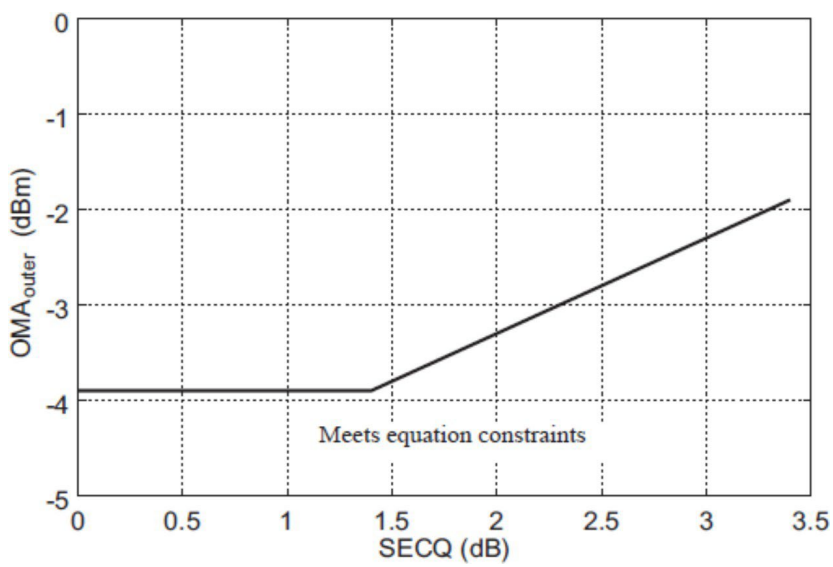

Illustration of Receiver Sensitivity Mask for 100G-DR

Pin Descriptions

Pin	Logic	Symbol	Name/Descriptions	Ref.
1		GND	Module Ground	1
2	CML-I	Tx2-	Transmitter inverted data input	
3	CML-I	Tx2+	Transmitter non-inverted data input	
4		GND	Module Ground	1
5	CML-I	Tx4-	Transmitter inverted data input	
6	CML-I	Tx4+	Transmitter non-inverted data input	
7		GND	Module Ground	1
8	LVTTL-I	MODSEIL	Module Select	
9	LVTTL-I	ResetL	Module Reset	
10		VCCRx	+3.3v Receiver Power Supply	2
11	LVCMOS-I	SCL	2-wire Serial interface clock	
12	LVCMOS-I/O	SDA	2-wire Serial interface data	
13		GND	Module Ground	1
14	CML-O	RX3+	Receiver non-inverted data output	
15	CML-O	RX3-	Receiver inverted data output	
16		GND	Module Ground	1
17	CML-O	RX1+	Receiver non-inverted data output	
18	CML-O	RX1-	Receiver inverted data output	
19		GND	Module Ground	1
20		GND	Module Ground	1
21	CML-O	RX2-	Receiver inverted data output	
22	CML-O	RX2+	Receiver non-inverted data output	
23		GND	Module Ground	1
24	CML-O	RX4-	Receiver inverted data output	
25	CML-O	RX4+	Receiver non-inverted data output	
26		GND	Module Ground	1
27	LVTTL-O	ModPrsL	Module Present, internal pulled down to GND	
28	LVTTL-O	IntL	Interrupt output, should be pulled up on host board	
29		VCCTx	+3.3v Transmitter Power Supply	2
30		VCC1	+3.3v Power Supply	2
31	LVTTL-I	LPMode	Low Power Mode	
32		GND	Module Ground	1
33	CML-I	Tx3+	Transmitter non-inverted data input	
34	CML-I	Tx3-	Transmitter inverted data input	
35		GND	Module Ground	1
36	CML-I	Tx1+	Transmitter non-inverted data input	
37	CML-I	Tx1-	Transmitter inverted data input	
38		GND	Module Ground	1

Notes:

1. GND is the symbol for signal and supply (power) common for the QSFP28 module. All are common within the QSFP28 module and all module voltages are referenced to this potential unless otherwise noted. Connect these directly to the host board signal-common ground plane. Open collector; should be pulled up with 4.7k-10k ohms on host board to a voltage between 3.15V and 3.6V.
2. Vcc Rx, Vcc1 and Vcc Tx are the receiver and transmitter power supplies and shall be applied concurrently. Vcc Rx Vcc1 and Vcc Tx may be internally connected within the QSFP28 Module in any combination. The connector pins are each rated for a maximum current of 1000mA.

Electrical Pin-out Details

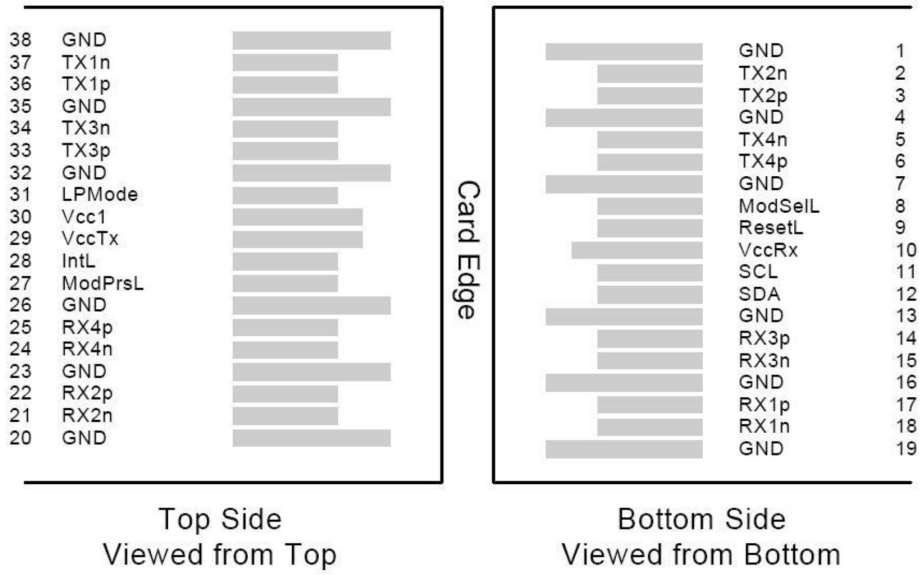

Recommended Power Supply Filter

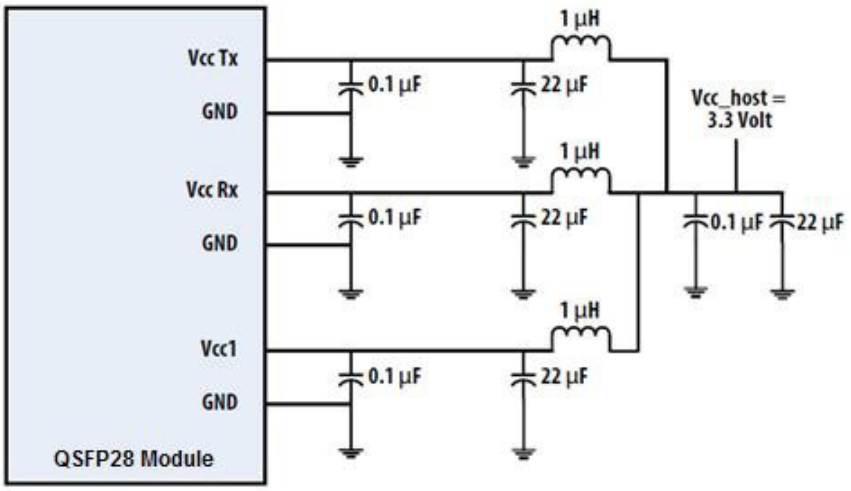

Digital Diagnostic Functions

Parameter	Symbol	Min	Max	Units	Notes
Temperature Monitor Absolute Error	DMI_Temp	-3	3	degC	Over operating temperature range
Supply Voltage Monitor Absolute Error	DMI _VCC	-0.1	0.1	V	Over full operating range
RX Power Monitor Absolute Error	DMI_RX	-2	2	dB	1
Bias Current Monitor	DMI_Ibias	-10%	10%	mA	
TX Power Monitor Absolute Error	DMI_TX	-2	2	dB	1

Notes:

1. Due to measurement accuracy of different single mode fibers, there could be an additional +/-1 dB fluctuation, or a +/- 3 dB total accuracy.

Mechanical Specifications

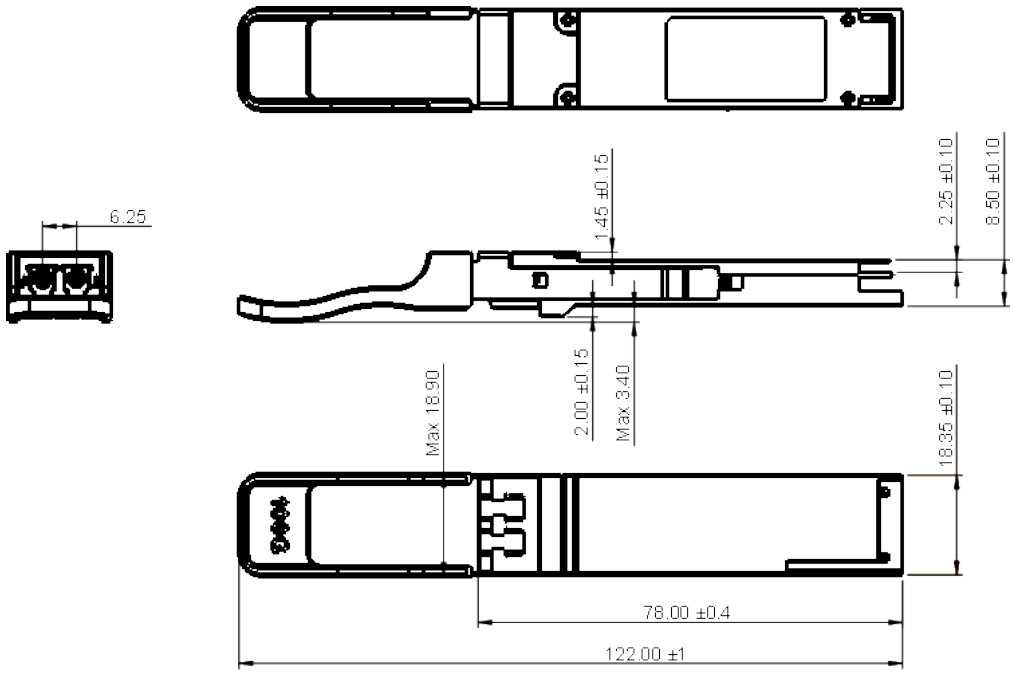

About Skylane Optics

Skylane is a leading provider of transceivers for optical communication.

We offer an extensive portfolio for the enterprise, access, datacenter and metropolitan fiber optical market as well as for smart home applications and home networks.

We cover the European, South American and North American market with a strong partner network and have offices in Belgium, Brazil, Sweden and USA.

Our offerings are characterized by high quality and performance. In combination with our strong technical support, we enable our customers to build cost optimized network solutions.

We offer an extensive range of high-quality products including transceivers (Optical and copper), Active Optical Cable (AOC), Direct Attach Cable (DAC), Mux/Demux, Coding Box.