Q2BQL002C0TFC3N

Juniper Networks® Compatible 100GBase-BX CWDM4 QSFP28 Transceiver (SMF, 1270nm to 1330nm, 2km, ALC, DOM)

Product Description

This Juniper Networks® compatible QSFP28 transceiver provides 100GBase-BX CWDM4 throughput up to 2km over single-mode fiber (SMF) using wavelengths between 1270nm to 1330nm via an ALC connector. This bidirectional unit must be used with another transceiver or network appliance of complementing wavelengths. It can operate at temperatures between 0 and 70C. Our transceiver is built to meet or exceed OEM specifications and is guaranteed to be 100% compatible with Juniper Networks®. It has been programmed, uniquely serialized, and tested for data-traffic and application to ensure that it will initialize and perform identically. All of our transceivers comply with Multi-Source Agreement (MSA) standards to provide seamless network integration. Additional product features include Digital Optical Monitoring (DOM) support which allows access to real-time operating parameters. We stand behind the quality of our products and proudly offer a limited lifetime warranty. Skylane's transceivers are RoHS compliant and lead-free.

Features:

- SFF-8665 Compliance
- Single-mode Fiber
- Duplex ALC Connector
- Hot Pluggable
- Metal with Lower EMI
- Commercial Temperature 0 to 70 Celsius
- RoHS Compliant and Lead Free
- Excellent ESD Protection

Applications:

- Ethernet over CWDM
- Access, Metro and Enterprise

For your product safety, please read the following information carefully before any manipulation of the transceiver:

ESD

This transceiver is specified as ESD threshold 1kV for SFI pins and 2kV for all others electrical input pins, tested per MIL-STD-883G, Method 3015.4 /JESD22-A114-A (HBM). However, normal ESD precautions are still required during the handling of this module.

LASER SAFETY

This is a Class1 Laser Product according to IEC 60825-1:2007. This product complies with 21 CFR 1040.10 and 1040.11 except for deviations pursuant to Laser Notice No. 50, dated (June 24, 2007).

The optical ports of the module need to be terminated with an optical connector or with a dust plug in order to avoid contamination.

Regulatory Compliance

- ESD to the Electrical PINs: compatible with MIL-STD-883E Method 3015.4.
- ESD to the LC Receptacle: compatible with IEC 61000-4-3.
- EMI/EMC: compatible with FCC Part 15 Subpart B Rules, EN55022:2010.
- Laser Eye Safety: compatible with FDA 21CFR, EN60950-1& EN (IEC) 60825-1, 2.
- RoHS compliant with EU RoHS 2.0 directive 2015/863/EU.

Absolute Maximum Ratings

Parameter	Symbol	Min.	Typ.	Max.	Unit	Notes
Maximum Supply Voltage	Vcc	-0.5		3.6	V	
Storage Temperature	Tstg	-40		85	°C	
Operating Case Temperature	Tc	0		70	°C	
Relative Humidity (Non-Condensing)	RH	0		85	%	
Damage Threshold Per Lane	THd	3.5			dBm	
Data Rate Per Lane			25.78125		Gbps	
Data Rate Accuracy		-100		100	ppm	
Link Distance With G.652	D	0.002		2	km	

Electrical Characteristics

Parameter	Symbol/Test Point	Min.	Typ.	Max.	Unit	Notes
Power Supply Voltage	Vcc	3.135	3.3	3.465	V	
Control Input Voltage - High		2		Vcc	V	
Control Input Voltage - Low		0		0.8	V	
Power Consumption	P_{DISS}			3.5	W	
Supply Current	Icc			1.06	A	
Transmitter (Per Lane)						
Overload Differential Voltage (pk-pk)	TP1a	900			mV	
Common-Mode Voltage (Vcm)	TP1	-350		2850	mV	1
Differential Termination Resistance Mismatch	TP1			10	%	At 1MHz
Differential Return Loss (SDD11)	TP1			See CEI-28G-VSR Equation 13-19	dB	
Common-Mode to Differential Conversion and Differential to Common-Mode Conversion (SDC11, SCD11)	TP1			See CEI-28G-VSR Equation 13-20	dB	
Stressed Input Test	TP1a	See CEI-28G-VSR Section 13.3.11.2.1				

Receiver (Per Lane)						
Differential Voltage (pk-pk)	TP4			900	mV	
Common-Mode Voltage (Vcm)	TP4	-350		2850	mV	1
Common-Mode Noise (RMS)	TP4			17.5	mV	
Differential Termination Resistance Mismatch	TP4			10	%	At 1MHZ
Differential Return Loss (SDD22)	TP4			See CEI-28G-VSR Equation 13-19	dB	
Commo- Mode to Differential Conversion and Differential to Common-Mode Conversion (SDC22, SCD22)	TP4			See CEI-28G-VSR Equation 13-21	dB	
Common-Mode Return Loss (SCC22)	TP4			-2	dB	2
Transition Time (20-80%)	TP4	9.5			ps	
Vertical Eye Closure (VEC)	TP4			5.5	dB	
Eye Width at 10^{-15} Probability (EW15)	TP4	0.57			UI	
Eye Height at 10^{-15} Probability (EH15)	TP4	228			mV	

Notes:

1. Vcm is generated by the host. Specification includes effects of ground offset voltage.
2. From 250MHz to 30GHz.

Optical Characteristics

Parameter	Symbol	Min.	Typ.	Max.	Unit	Notes
Wavelength Assignment	L0	1264.5	1271	1277.5	nm	
	L1	1284.5	1291	1297.5	nm	
	L2	1304.5	1311	1317.5	nm	
	L3	1324.5	1331	1337.5	nm	
Transmitter						
Side-Mode Suppression Ratio	SMSR	30			dB	
Total Average Launch Power	Pavg			8.5	dBm	
Average Launch Power Per Lane	Pavg	-6.5		2.5	dBm	
Optical Modulation Amplitude (OMA) Per Lane	POMA	-4.0		2.5	dBm	1
Launch Power in OMA Minus Transmitter and Dispersion Penalty (TDP) Per Lane		-5.0			dBm	
TDP Per Lane	TDP			3.0	dB	
Extinction Ratio	ER	3.5			dB	
Optical Return Loss Tolerance	ORLT			20	dB	
Transmitter Reflectance				-12	dB	
Average Launch Power Off Transmitter Per Lane	Poff			-30	dBm	
Transmitter Eye Mask Definition: (X1, X2, X3, Y1, Y2, Y3)		(0.31, 0.4, 0.45, 0.34, 0.38, 0.4)				2
Receiver						
Damage Threshold Per Lane	THd	3.5			dBm	3
Average Receive Power Per Lane		-11.5		2.5	dBm	
Receive Power (OMA) Per Lane				2.5	dBm	
Receiver Sensitivity (OMA) Per Lane	SEN			-10	dBm	For BER=$5x10^{-5}$
Stressed Receiver Sensitivity (OMA) Per Lane				-7.3	dBm	4
Receiver Reflectance				-26	dB	
LOS Assert	LOSA	-30			dBm	
LOS De-Assert	LOSD			-15	dBm	
LOS Hysteresis	LOSH	0.5			dB	
Receiver Electrical 3dB Upper Cutoff Frequency Per Lane				31	GHz	
Conditions of Stress Receiver Sensitivity Test (Note 5)						
Vertical Eye Closure Penalty Per Lane		1.9			dB	
Stressed Eye J2 Jitter Per Lane		0.33			UI	
Stressed Eye J4 Jitter Per Lane		0.48			UI	
SRS Eye Mask Definition: (X1, X2, X3, Y1, Y2, Y3)		(0.39, 0.5, 0.5, 0.39, 0.39, 0.4)				

Notes:

1. Even if the TDP<1.0 dB, the OMA minimum must exceed the minimum value specified here.
2. Hit ratio $5x10^{-5}$.
3. The receiver shall be able to tolerate, without damage, continuous exposure to a modulated optical input signal having this power level on one lane. The receiver does not have to operate correctly at this input power.
4. Measured with conformance test signal for BER=$5x10^{-5}$.
5. Vertical Eye Closure Penalty, Stressed Eye J2 Jitter, Stressed Eye J4 Jitter, and SRS Eye Mask Definition are test conditions for measuring Stressed Receiver Sensitivity. They are not characteristics of the receiver.

Pin Descriptions

Pin	Logic	Symbol	Name/Descriptions	Notes
1		GND	Module Ground.	1
2	CML-I	Tx2-	Transmitter Inverted Data Input.	
3	CML-I	Tx2+	Transmitter Non-Inverted Data Output.	
4		GND	Module Ground.	1
5	CML-I	Tx4-	Transmitter Inverted Data Input.	
6	CML-I	Tx4+	Transmitter Non-Inverted Data Output.	
7		GND	Module Ground.	1
8	LVTTL-I	ModSelL	Module Select.	
9	LVTTL-I	ResetL	Module Reset.	
10		VccRx	+3.3V Receiver Power Supply.	2
11	LVCMOS-I/O	SCL	2-Wire Serial Interface Clock.	
12	LVCMOS-I/O	SDA	2-Wire Serial Interface Data.	
13		GND	Module Ground.	
14	CML-O	Rx3+	Receiver Non-Inverted Data Output.	
15	CML-O	Rx3-	Receiver Inverted Data Output.	
16		GND	Module Ground.	1
17	CML-O	Rx1+	Receiver Non-Inverted Data Output.	
18	CML-O	Rx1-	Receiver Inverted Data Output.	
19		GND	Module Ground.	1
20		GND	Module Ground.	1
21	CML-O	Rx2-	Receiver Inverted Data Output.	
22	CML-O	Rx2+	Receiver Non-Inverted Data Output.	
23		GND	Module Ground.	1
24	CML-O	Rx4-	Receiver Inverted Data Output.	1
25	CML-O	Rx4+	Receiver Non-Inverted Data Output.	

26		GND	Module Ground.	1
27	LVTTL-O	ModPrsL	Module Present.	
28	LVTTL-O	IntL	Interrupt.	
29		VccTx	+3.3V Transmitter Power Supply.	2
30		Vcc1	+3.3V Power Supply.	2
31	LVTTL-I	LPMode	Low-Power Mode.	
32		GND	Module Ground.	1
33	CML-I	Tx3+	Transmitter Non-Inverted Data Input.	
34	CML-I	Tx3-	Transmitter Inverted Data Output.	
35		GND	Module Ground.	1
36	CML-I	Tx1+	Transmitter Non-Inverted Data Input.	
37	CML-I	Tx1-	Transmitter Inverted Data Output.	
38		GND	Module Ground.	1

Notes:

1. GND is the symbol for signal and supply (power) common for QSFP28 modules. All are common within the QSFP28 module, and all module voltages are referenced to this potential unless otherwise noted. Connect these directly to the host board signal common ground plane.
2. VccRx, Vcc1, and VccTx are the receiving and transmission power suppliers and shall be applied concurrently. Recommended host board power supply filtering is shown below. VccRx, Vcc1, and VccTx may be internally connected within the QSFP28 transceiver module in any combination. The connector pins are each rated for a maximum current of 500mA.

Electrical Pin-Out Details

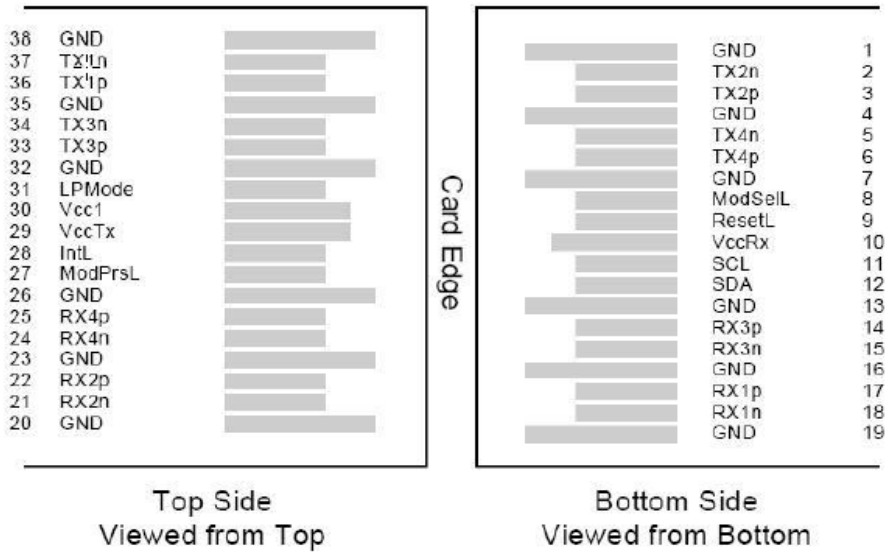

Recommended Power Supply Filter

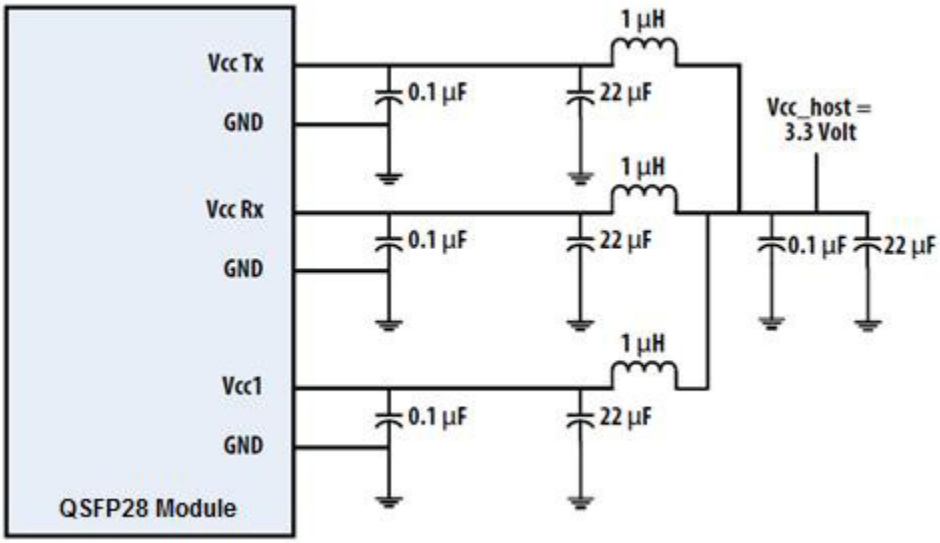

Transceiver Block Diagram

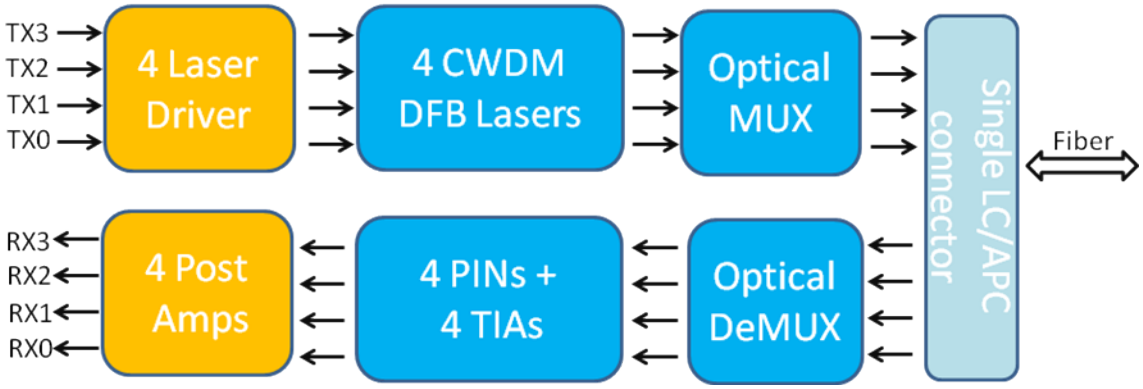

Mechanical Specifications

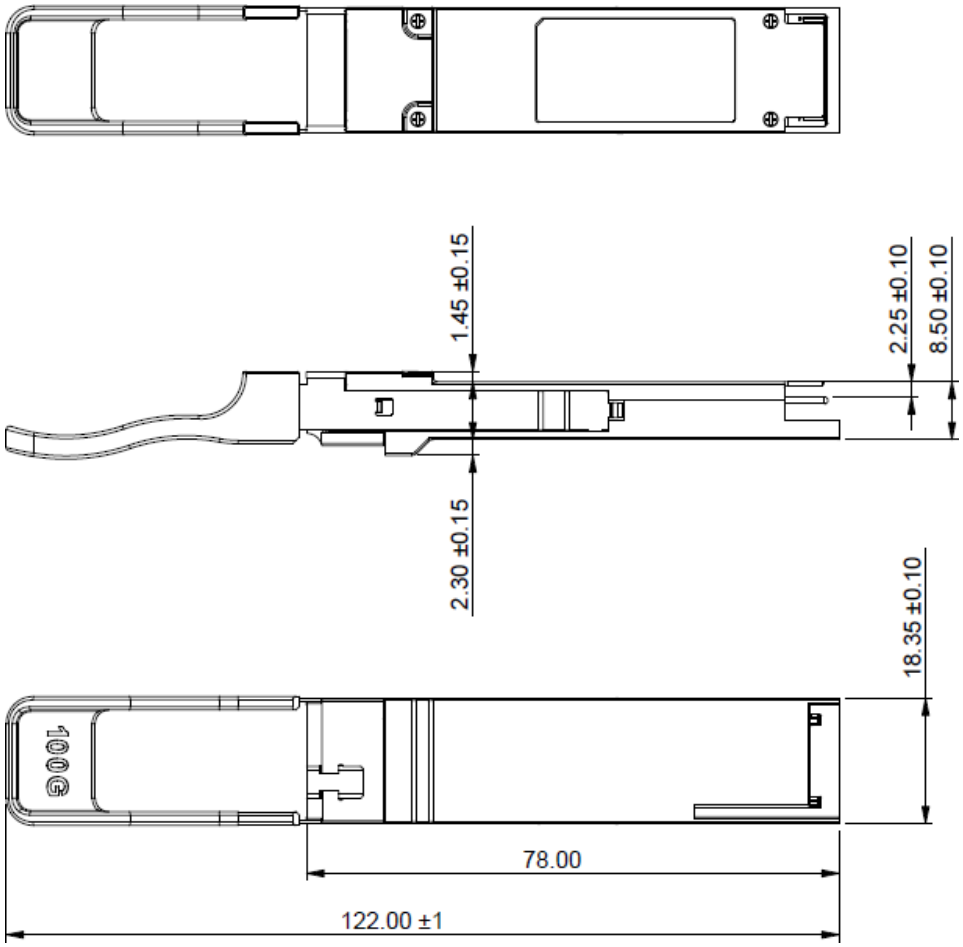

About Skylane Optics

Skylane is a leading provider of transceivers for optical communication.

We offer an extensive portfolio for the enterprise, access, datacenter and metropolitan fiber optical market as well as for smart home applications and home networks.

We cover the European, South American and North American market with a strong partner network and have offices in Belgium, Brazil, Sweden and USA.

Our offerings are characterized by high quality and performance. In combination with our strong technical support, we enable our customers to build cost optimized network solutions.

We offer an extensive range of high-quality products including transceivers (Optical and copper), Active Optical Cable (AOC), Direct Attach Cable (DAC), Mux/Demux, Coding Box.