P06153-B26-SKY

HP® P06153-B26 Compatible 200GBase-AOC QSFP56 Infiniband HDR Active Optical Cable (850nm, MMF, 30m)

Product Description

This is an HP® P06153-B26 compatible 200GBase-AOC QSFP56 to QSFP56 Infiniband HDR active optical cable that operates over active fiber with a maximum reach of 30m (98.4ft). At a wavelength of 850nm, it has been programmed, uniquely serialized, and data-traffic and application tested to ensure it is 100% compliant and functional. This active optical cable is built to comply with MSA (Multi-Source Agreement) standards. We stand behind the quality of our products and proudly offer a limited lifetime warranty.

Skylane's transceivers are RoHS compliant and lead-free.

Features:

- 4 independent parallel optical channels
- Hot Pluggable
- Each channel data rate up to 26.56GBaud
- CML Compatible electrical I/O
- Operating Temperature Range: 0 to 70 Celsius
- OM3 Multi-mode
- RoHS Compliant and lead-free
- Color: Aqua

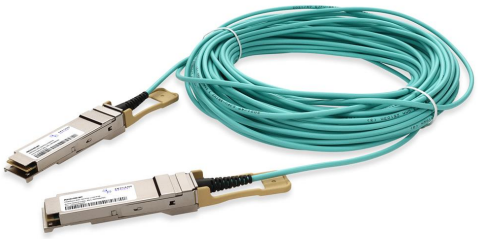

Applications:

- InfiniBand HDR
- 200GBase Ethernet

For your product safety, please read the following information carefully before any manipulation of the transceiver:

ESD

This transceiver is specified as ESD threshold 1kV for SFI pins and 2kV for all others electrical input pins, tested per MIL-STD-883G, Method 3015.4 /JESD22-A114-A (HBM). However, normal ESD precautions are still required during the handling of this module.

LASER SAFETY

This is a Class1 Laser Product according to IEC 60825-1:2007. This product complies with 21 CFR 1040.10 and 1040.11 except for deviations pursuant to Laser Notice No. 50, dated (June 24, 2007).

The optical ports of the module need to be terminated with an optical connector or with a dust plug in order to avoid contamination.

General Specifications

Parameter	Symbol	Min.	Typ.	Max.	Unit
Storage Temperature	Tstg	-40		85	°C
Operating Case Temperature	Tc	0	25	70	°C
Supply Voltage	Vcc	0		3.6	V
Relative Operating Humidity	RH	5		85	%
Relative Storage Humidity	RH	0		95	%

Notes:

1. Exceeding the Absolute Maximum Ratings may cause irreversible damage to the device. The device is not intended to be operated under the condition of simultaneous Absolute Maximum Ratings, a condition which may cause irreversible damage to the device. RH is a non-condensing condition.

Electrical Characteristics

Parameter	Symbol	Min.	Typ.	Max.	Unit	Notes
Power Supply Voltage	Vcc	3.14	3.3	3.46	V	
Single Module Supply Current	IIN		1150	1350	mA	
Signaling Speed Per Channel	S		26.56		GBaud	
Transmitter						
Tx_Data Differential Input Voltage	VIN	300		900	mV	
Tx_Data Differential Input Impedance	ZIN		100		Ω	
Receiver						
Rx_Data Differential Output Voltage	VOUT			900	mV	
Rx_Data Differential Output Impedance	ZOUT	90	100	110	Ω	
Link BER	BER			$5E^{-5}$		1

Notes:

1. @26.56GBaud PRBS31Q.

Cable Specifications

Parameter	Value
Minimum Bend Radius (mm)	30
Cable Diameter (mm)	3.0 ± 0.15
Cable Tolerance	+0.2/-0

Pin Descriptions

Pin	Symbol	Name/Description	Notes
1	GND	Module Ground.	
2	Tx2-	Transmitter Inverted Data Input.	
3	Tx2+	Transmitter Non-Inverted Data Input.	
4	GND	Module Ground.	
5	Tx4-	Transmitter Inverted Data Input.	
6	Tx4+	Transmitter Non-Inverted Data Input.	
7	GND	Module Ground.	
8	ModselL	Module Select.	
9	ResetL	Module Reset.	
10	VccRx	Receiver +3.3V DC Power Supply.	
11	SCL	I2C Serial Clock.	
12	SDA	I2C Serial Data.	
13	GND	Module Ground.	
14	Rx3+	Receiver Non-Inverted Differential Output.	
15	Rx3-	Receiver Inverted Differential Output.	
16	GND	Module Ground.	
17	Rx1+	Receiver Non-Inverted Differential Output	
18	Rx1-	Receiver Inverted Differential Output	
19	GND	Module Ground.	
20	GND	Module Ground.	
21	Rx2-	Receiver Inverted Differential Output.	
22	Rx2+	Receiver Non-Inverted Differential Output.	
23	GND	Module Ground.	
24	Rx4-	Receiver Inverted Differential Output.	
25	Rx4+	Receiver Non-Inverted Differential Output.	
26	GND	Module Ground.	
27	ModPrsL	Module Present.	
28	IntL	Interrupt.	
29	VccTx	Transmitter +3.3V DC Power Supply.	
30	Vcc1	+3.3V DC Power Supply.	
31	LPMode	Low-Power Mode.	
32	GND	Module Ground.	
33	Tx3+	Transmitter Non-Inverted Data Input.	
34	Tx3-	Transmitter Inverted Data Input.	
35	GND	Module Ground.	

36	Tx1+	Transmitter Non-Inverted Data Input.	
37	Tx1-	Transmitter Inverted Data Input.	
38	GND	Module Ground.	

Pin Assignment

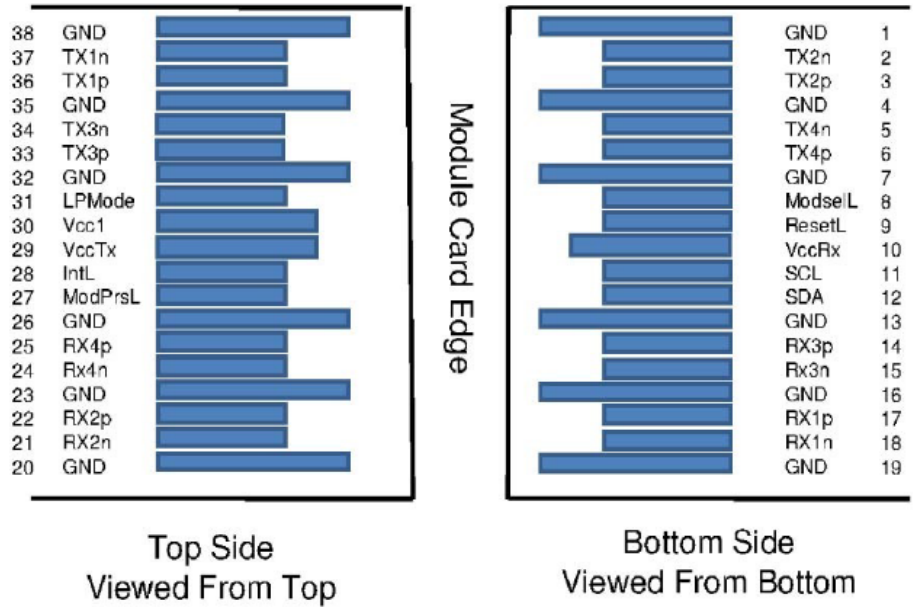

Block Diagram

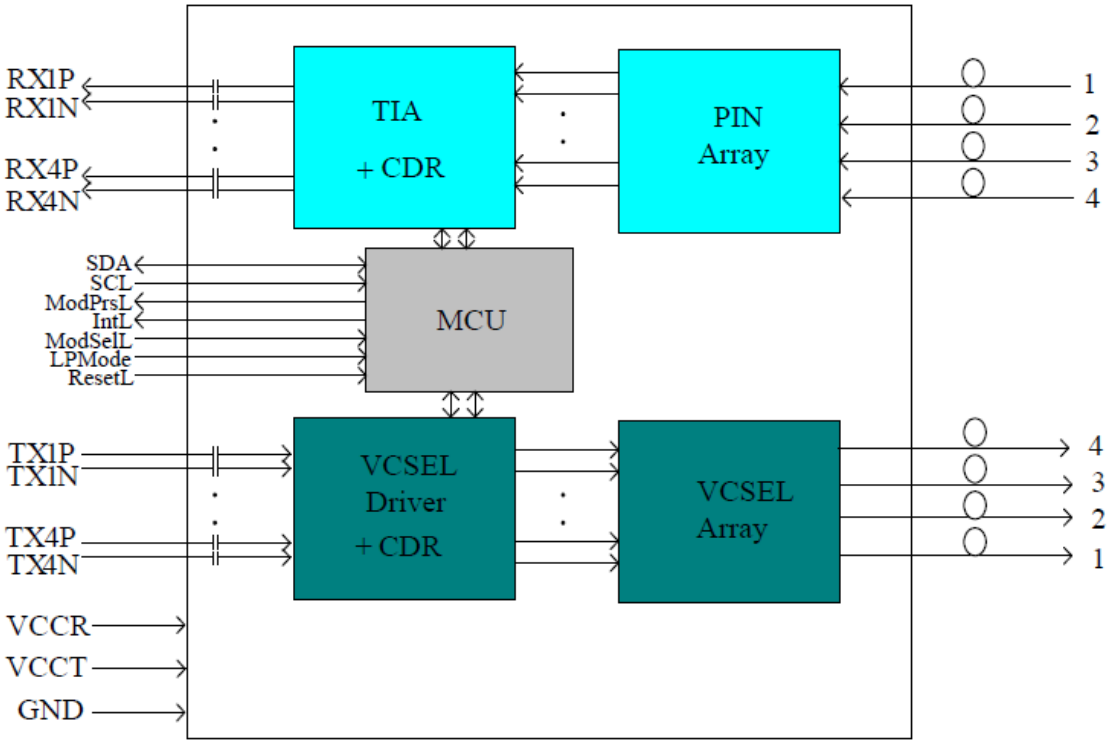

Electrical Interface

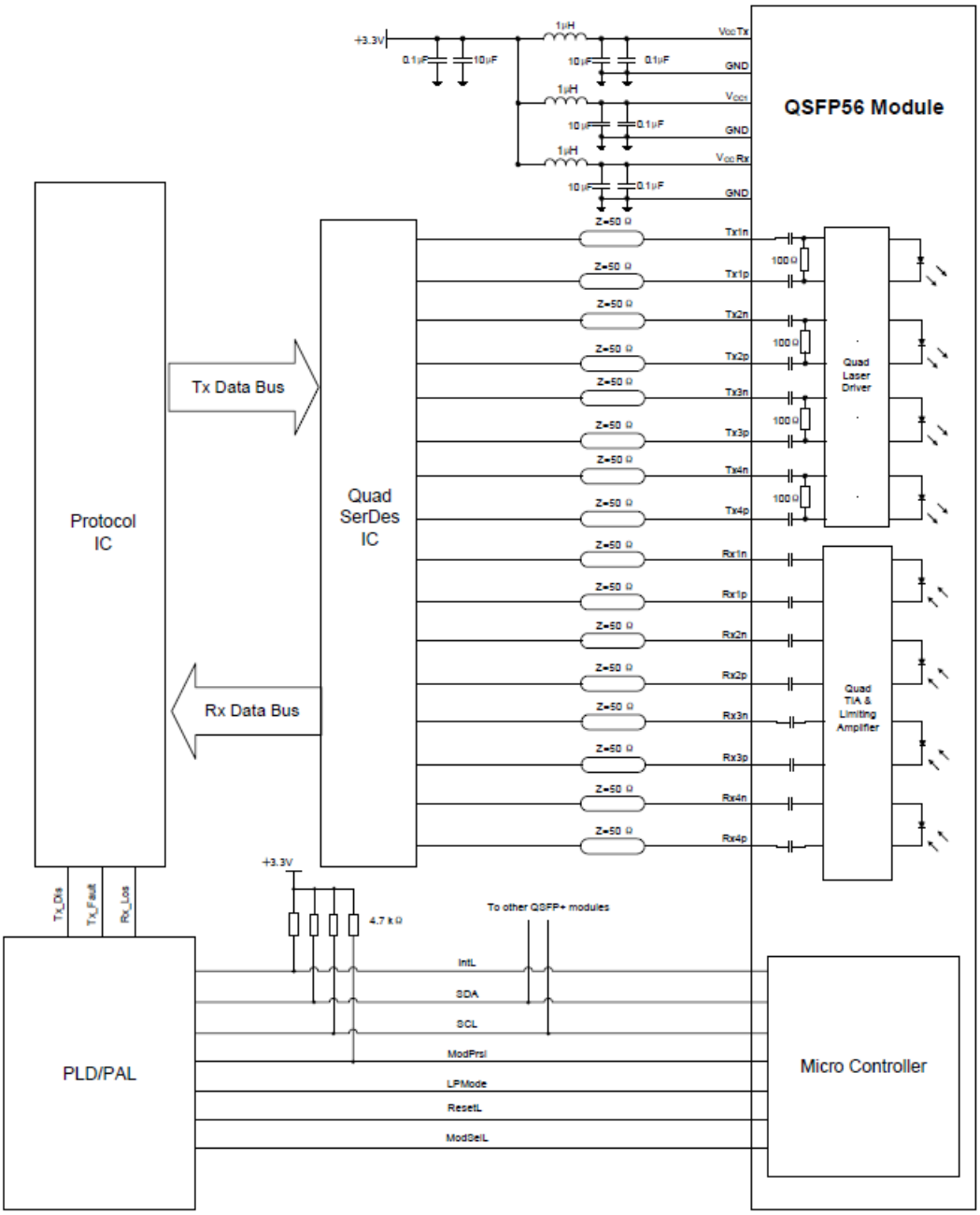

Mechanical Specifications

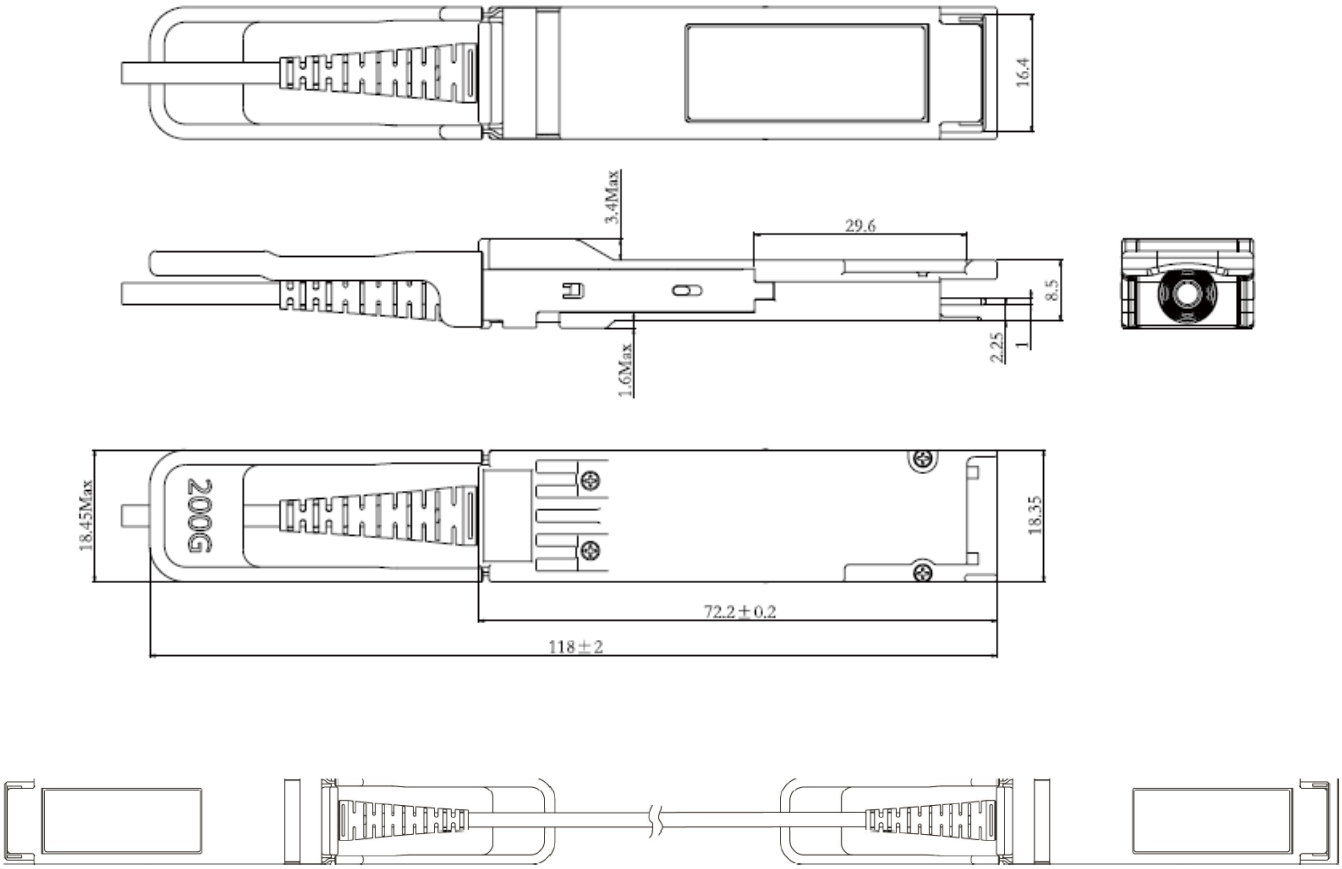

Notes:

1. Tolerance ±0.1mm.
2. Others according with SFF-8661 MSA or Customer Spec.

About Skylane Optics

Skylane is a leading provider of transceivers for optical communication.

We offer an extensive portfolio for the enterprise, access, datacenter and metropolitan fiber optical market as well as for smart home applications and home networks.

We cover the European, South American and North American market with a strong partner network and have offices in Belgium, Brazil, Sweden and USA.

Our offerings are characterized by high quality and performance. In combination with our strong technical support, we enable our customers to build cost optimized network solutions.

We offer an extensive range of high-quality products including transceivers (Optical and copper), Active Optical Cable (AOC), Direct Attach Cable (DAC), Mux/Demux, Coding Box.