MGB-LB20-SKY

Planet® MGB-LB20 Compatible 1000Base-BX SFP Transceiver (SMF, 1550nmTx/1310nmRx, 20km, LC, DOM)

Product Description

This Planet® MGB-LB20 compatible SFP transceiver provides 1000Base-BX throughput up to 20km over single-mode fiber (SMF) using a wavelength of 1550nmTx/1310nmRx via an LC connector. This bidirectional unit must be used with another transceiver or network appliance of complementing wavelengths. It can operate at temperatures between 0 and 70C. Our transceiver is built to meet or exceed OEM specifications and is guaranteed to be 100% compatible with Planet®. It has been programmed, uniquely serialized, and tested for data-traffic and application to ensure that it will initialize and perform identically. All of our transceivers comply with Multi-Source Agreement (MSA) standards to provide seamless network integration. Additional product features include Digital Optical Monitoring (DOM) support which allows access to real-time operating parameters. We stand behind the quality of our products and proudly offer a limited lifetime warranty. Skylane's transceivers are RoHS compliant and lead-free.

Features:

- INF-8074 and SFF-8472 Compliance
- Simplex LC Connector
- Commercial Temperature 0 to 70 Celsius
- Single-mode Fiber
- Hot Pluggable
- Excellent ESD Protection
- Metal with Lower EMI
- RoHS Compliant and Lead Free

Applications:

- 1000Base-BX Ethernet
- Access (FTTx) and Enterprise
- 1x Fibre Channel

For your product safety, please read the following information carefully before any manipulation of the transceiver:

ESD

This transceiver is specified as ESD threshold 1kV for SFI pins and 2kV for all others electrical input pins, tested per MIL-STD-883G, Method 3015.4 /JESD22-A114-A (HBM). However, normal ESD precautions are still required during the handling of this module.

LASER SAFETY

This is a Class1 Laser Product according to IEC 60825-1:2007. This product complies with 21 CFR 1040.10 and 1040.11 except for deviations pursuant to Laser Notice No. 50, dated (June 24, 2007).

The optical ports of the module need to be terminated with an optical connector or with a dust plug in order to avoid contamination.

Absolute Maximum Ratings

Parameter	Symbol	Min.	Max.	Unit
Maximum Supply Voltage	Vcc	-0.5	4.0	V
Storage Temperature	TS	-40	85	°C
Operating Case Temperature	Tc	0	70	°C
Operating Humidity	RH	5	85	%
Receiver Power	R_{MAX}		-3	dBm
Maximum Bitrate	B_{max}		1.25	Gbps

Electrical Characteristics (TOP=25°C, Vcc=3.3Volts)

Parameter	Symbol	Min.	Typ.	Max.	Unit	Notes
Power Supply Voltage	Vcc	3.15	3.30	3.43	V	
Power Supply Current	Icc			303	mA	
Power Consumption	P_{DISS}			1	W	
Transmitter						
Differential data input swing	Vin,pp	120		850	mV	
Input differential impedance	Zin	80	100	120	Ω	
Receiver						
Differential data output swing	Vout, pp	300		850	mV	
Output differential impedance	Zin	80	100	120	Ω	

Optical Characteristics

Parameter	Symbol	Min.	Typ.	Max.	Unit	Notes
Transmitter						
Optical Power (average)	P_{AVE}	-9		-3	dBm	1
Optical Extinction Ratio	ER	9			dB	
Optical Wavelength	Tλ	1530	1550	1570	nm	
Insertion loss	IL		0.7			
Receiver						
Receiver Sensitivity (average)	R_{AVE}			-19.5	dBm	2
Receiver overload	P_{max}	-3			dBm	3
Receiver wavelength	Rλ	1260		1360	nm	

Notes:

1. Coupled into a Single-mode fibre
2. Average power, back-to-back, @1.25Gbps, BER 1E-12, PRBS 2^{31}-1.
3. Exceeding the Receiver overload can physically damage the module. Please use appropriate attenuation.

Pin Descriptions

Pin	Symbol	Name/Descriptions	Ref.
1	VeeT	Transmitter Ground (Common with Receiver Ground).	1
2	TX Fault	Transmitter Fault. LVTTL-O	2
3	TX Disable	Transmitter Disable. Laser output disabled on high or open. LVTT-I.	3
4	SDA	2-Wire Serial Interface Data Line (Same as MOD-DEF2 in INF-8074i). LVTTL-I/O.	
5	SCL	2-Wire Serial Interface Data Line (Same as MOD-DEF2 in INF-8074i). LVTTL-I.	
6	MOD_ABS	Module Absent, Connect to VeeT or VeeR in Module.	4
7	RS0	Rate Select 0. Not used	5
8	LOS	Loss of Signal indication. Logic 0 indicates normal operation. LVTTL-O.	2
9	RS1	Rate Select 1. Not used	5
10	VeeR	Receiver Ground (Common with Transmitter Ground).	1
11	VeeR	Receiver Ground (Common with Transmitter Ground).	1
12	RD-	Receiver Inverted DATA out. AC Coupled. CML-O.	
13	RD+	Receiver Non-inverted DATA out. AC Coupled. CML-O.	
14	VeeR	Receiver Ground (Common with Transmitter Ground).	1
15	VccR	Receiver Power Supply.	
16	VccT	Transmitter Power Supply.	
17	VeeT	Transmitter Ground (Common with Receiver Ground).	1
18	TD+	Transmitter Non-Inverted DATA in. AC Coupled. CML-I.	
19	TD-	Transmitter Inverted DATA in. AC Coupled. CML-O.	
20	VeeT	Transmitter Ground (Common with Receiver Ground).	1

Notes:

1. The module signal ground contacts, VeeR and VeeT, should be isolated from the module case.
2. This contact is an open collector/drain output and should be pulled up to the Vcc_Host with resister in the range 4.7KΩ to 10KΩ. Pull ups can be connected to one or several power supplies, however the host board design shall ensure that no module contract has voltage exceeding module VccT/R +0.5.V.
3. Tx_Disable is an input contact with a 4.7KΩ to 10KΩ pull-up resistor to VccT inside module.
4. Mod_ABS is connected to VeeT or VeeR in the SFP+ module. The host may pull the contract up to Vcc_Host with a resistor in the range from 4.7KΩ to 10KΩ. Mod_ABS is asserted “High” when the SFP+ module is physically absent from a host slot.
5. Internally pulled down per SFF-8431

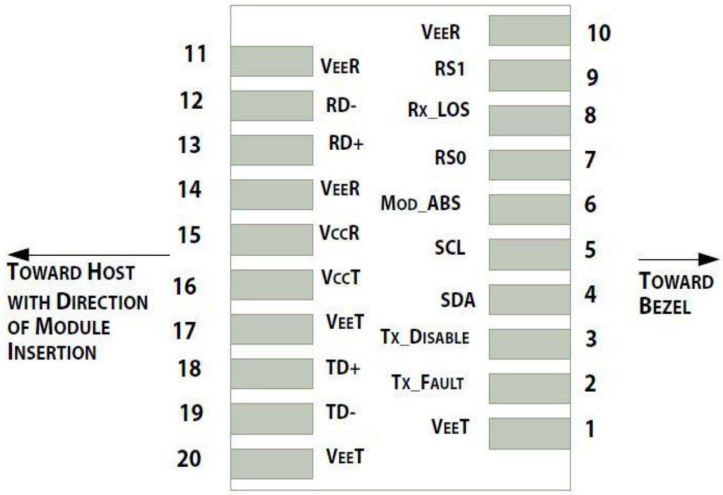

Pin-out of connector Block on Host board

Recommended Circuit Schematic

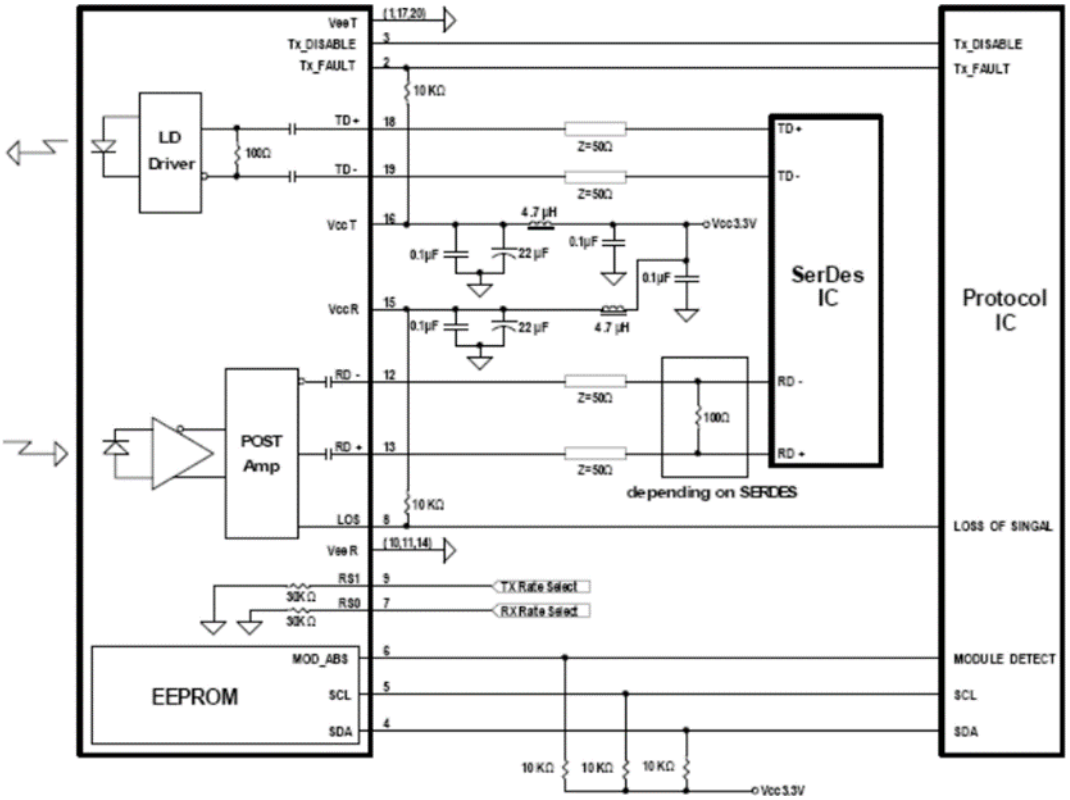

Mechanical Specifications

Small Form Factor Pluggable (SFP) transceivers are compatible with the dimensions defined by the SFP Multi-Sourcing Agreement (MSA).

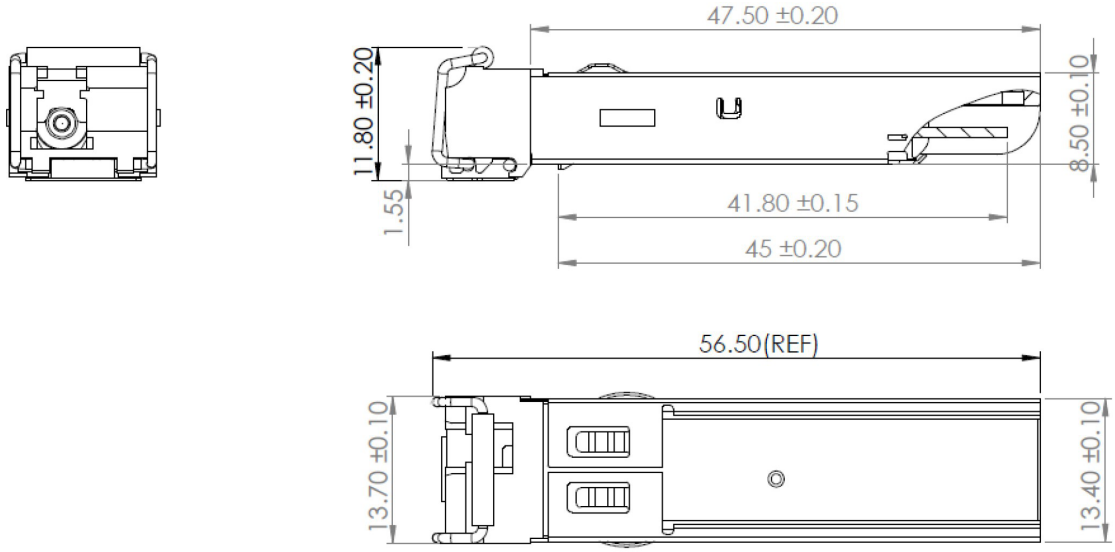

EEPROM Information

EEPROM memory map specific data field description is as below:

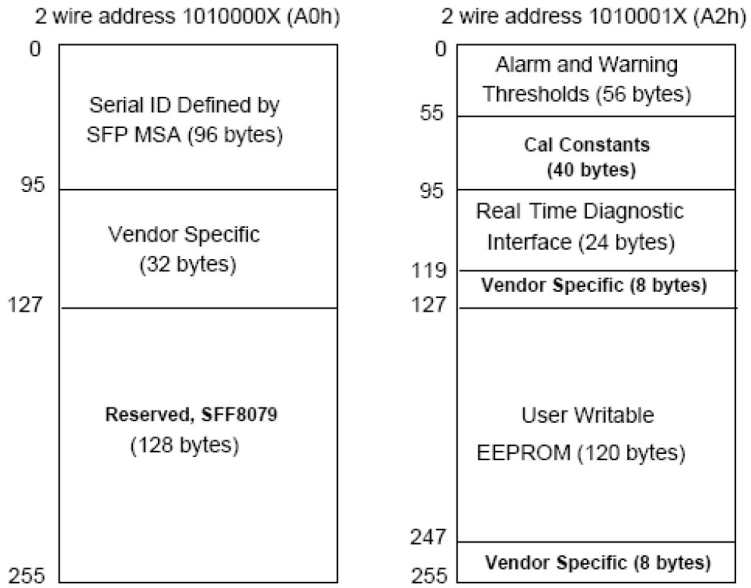

About Skylane Optics

Skylane is a leading provider of transceivers for optical communication.

We offer an extensive portfolio for the enterprise, access, datacenter and metropolitan fiber optical market as well as for smart home applications and home networks.

We cover the European, South American and North American market with a strong partner network and have offices in Belgium, Brazil, Sweden and USA.

Our offerings are characterized by high quality and performance. In combination with our strong technical support, we enable our customers to build cost optimized network solutions.

We offer an extensive range of high-quality products including transceivers (Optical and copper), Active Optical Cable (AOC), Direct Attach Cable (DAC), Mux/Demux, Coding Box.