MC220731V-020-SKY

Mellanox® MC220731V-020 Compatible 56GBase-AOC QSFP+ Active Optical Cable (850nm, MMF, 20m)

Product Description

This is a Mellanox® MC220731V-020 compatible 56GBase-AOC QSFP+ to QSFP+ active optical cable that operates over multi-mode fiber with a maximum reach of 20.0m (65.6ft). At a wavelength of 850nm, it has been programmed, uniquely serialized, and data-traffic and application tested to ensure it is 100% compliant and functional. This active optical cable is built to comply with MSA (Multi-Source Agreement) standards. We stand behind the quality of our products and proudly offer a limited lifetime warranty.

Skylane's transceivers are RoHS compliant and lead-free.

Features:

- Complies with QSFP MSA high- density form factor
- Four-channel full-duplex active optical cable
- Multi-rate capability: 1.06Gbps to 14.025Gbps per channel
- Round, riser-rated (OFNR)
- Built-in digital diagnostic functions
- Single 3.3V power supply
- Commercial Temperature 0 to 70 Celsius
- Hot Pluggable
- RoHS Compliant and Lead-Free
- Metal with lower EMI

Applications:

- x

For your product safety, please read the following information carefully before any manipulation of the transceiver:

ESD

This transceiver is specified as ESD threshold 1kV for SFI pins and 2kV for all others electrical input pins, tested per MIL-STD-883G, Method 3015.4 /JESD22-A114-A (HBM). However, normal ESD precautions are still required during the handling of this module.

LASER SAFETY

This is a Class1 Laser Product according to IEC 60825-1:2007. This product complies with 21 CFR 1040.10 and 1040.11 except for deviations pursuant to Laser Notice No. 50, dated (June 24, 2007).

The optical ports of the module need to be terminated with an optical connector or with a dust plug in order to avoid contamination.

General Specifications

Parameter	Symbol	Min.	Typ.	Max.	Unit
Supply Voltage	Vcc	3.13	3.3	3.47	V
Storage Temperature	Tstg	-20		+85	°C
Operating Case Temperature	Tc	0		70	°C
Data Rate per Channel	DR	1		14.0645	Gbps
Bit Error Rate	BER			$<10^{-12}$	
Data Speed Tolerance	ΔDR	-100		100	ppm
Link Distance with OM3 fiber	D	0		20	m

Electrical Specifications

Parameter	Symbol	Min.	Typ.	Max.	Unit	Notes
Power Supply Voltage	Vcc	3.13	3.3	3.47	V	
Power Consumption		-		1.5	W	
Supply Current			230		mA	Per End Typical
Differential Input Impedance	ZIN	90	100	110	Ω	
Differential Output Impedance	ZOUT	90	100	110	Ω	
Differential Input Voltage Amplitude	ΔVIN	300		1100	mVp-p	
Differential Output Voltage Amplitude	ΔVOUT	500		800	mVp-p	
Bit Error Rate	BR			E-12		
Input Logic Level - High	VIH	2.0		Vcc	V	
Input Logic Level - Low	VIL	0		0.8	V	
Output Logic Level - High	VOH	Vcc-0.5		Vcc	V	
Output Logic Level - Low	VOL	0		0.4	V	

Pin Descriptions

Pin	Logic	Symbol	Name/Description	Note
1		GND	Module Ground.	1
2	CML-I	Tx2n	Transmitter Inverted Data Input.	
3	CML-I	Tx2p	Transmitter Non-Inverted Data Output.	
4		GND	Module Ground.	1
5	CML-I	Tx4n	Transmitter Inverted Data Input.	
6	CML-I	Tx4p	Transmitter Non-Inverted Data Output.	
7		GND	Module Ground.	1
8	LVTLL-I	ModSelL	Module Select.	
9	LVTLL-I	ResetL	Module Reset.	
10		VccRx	+ 3.3V Receiver Power Supply.	2
11	LVCMOS-I/O	SCL	2-Wire Serial Interface Clock.	
12	LVCMOS-I/O	SDA	2-Wire Serial Interface Data.	
13		GND	Module Ground.	
14	CML-O	Rx3p	Receiver Non-Inverted Data Output.	
15	CML-O	Rx3n	Receiver Inverted Data Output.	
16		GND	Module Ground.	1
17	CML-O	Rx1p	Receiver Non-Inverted Data Output.	
18	CML-O	Rx1n	Receiver Inverted Data Output.	
19		GND	Module Ground.	1
20		GND	Module Ground.	1
21	CML-O	Rx2n	Receiver Inverted Data Output.	
22	CML-O	Rx2p	Receiver Non-Inverted Data Output.	
23		GND	Module Ground.	1
24	CML-O	Rx4n	Receiver Inverted Data Output.	1
25	CML-O	Rx4p	Receiver Non-Inverted Data Output.	
26		GND	Module Ground.	1
27	LVTTL-O	ModPrsL	Module Present.	
28	LVTTL-O	IntL	Interrupt.	
29		VccTx	+3.3 V Transmitter Power Supply.	2
30		Vcc1	+3.3 V Power Supply.	2
31	LVTTL-I	LPMode	Low-Power Mode.	
32		GND	Module Ground.	1
33	CML-I	Tx3p	Transmitter Non-Inverted Data Input.	
34	CML-I	Tx3n	Transmitter Inverted Data Output.	
35		GND	Module Ground.	1
36	CML-I	Tx1p	Transmitter Non-Inverted Data Input.	
37	CML-I	Tx1n	Transmitter Inverted Data Output.	
38		GND	Module Ground.	1

Notes:

1. Module circuit ground is isolated from module chassis ground within the module. GND is the symbol for signal and supply (power) common for QSFP modules.
2. The connector pins are each rated for a maximum current of 500mA.

Electrical Pin-Out Details

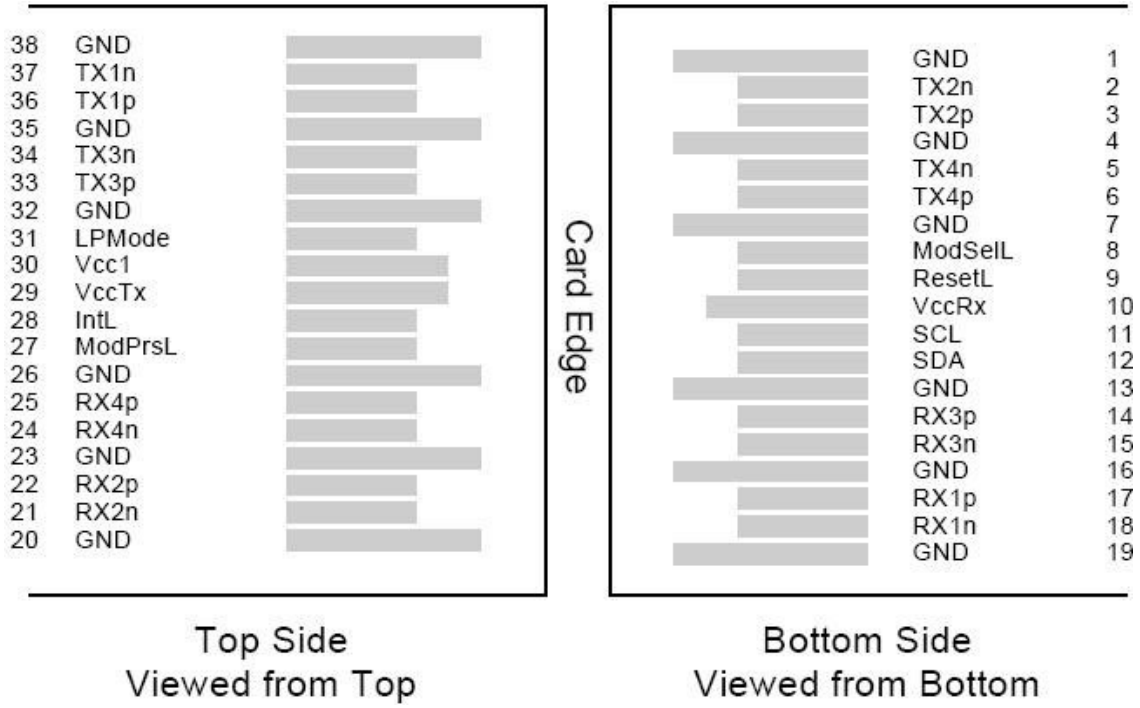

Power Supply Filtering

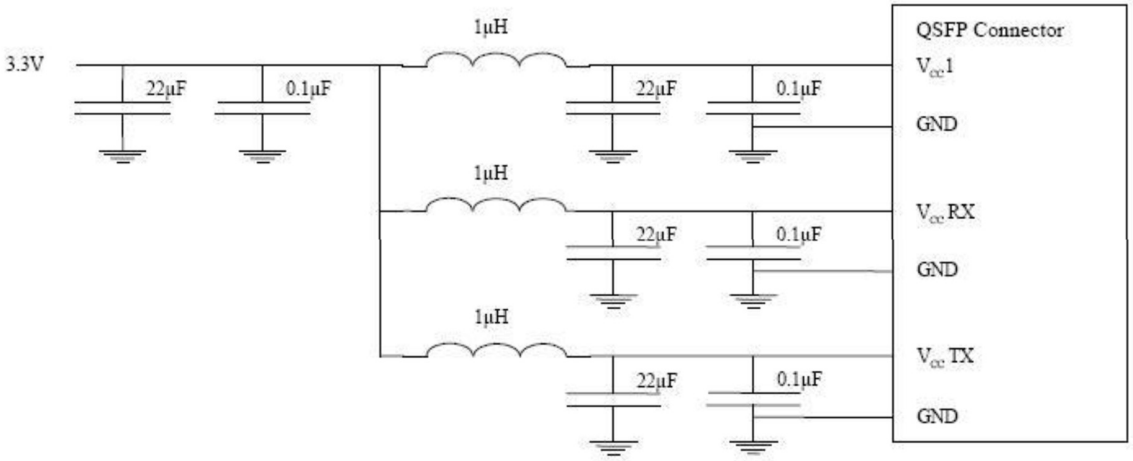

Mechanical Specifications

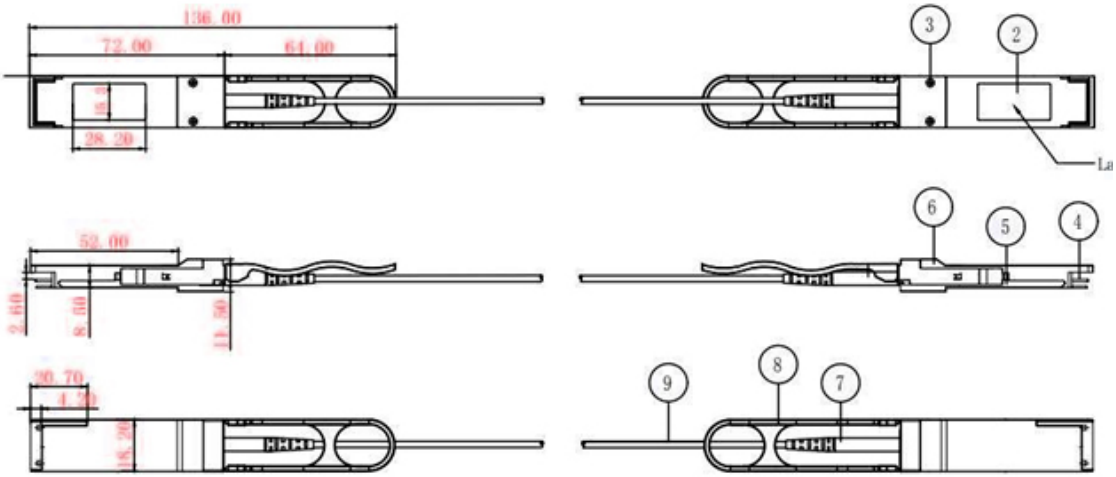

About Skylane Optics

Skylane is a leading provider of transceivers for optical communication.

We offer an extensive portfolio for the enterprise, access, datacenter and metropolitan fiber optical market as well as for smart home applications and home networks.

We cover the European, South American and North American market with a strong partner network and have offices in Belgium, Brazil, Sweden and USA.

Our offerings are characterized by high quality and performance. In combination with our strong technical support, we enable our customers to build cost optimized network solutions.

We offer an extensive range of high-quality products including transceivers (Optical and copper), Active Optical Cable (AOC), Direct Attach Cable (DAC), Mux/Demux, Coding Box.