MC2206130-003-SKY

Mellanox® MC2206130-003 Compatible 40GBase-CU QSFP+ Direct Attach Cable (Passive Twinax, 3m)

Product Description

This is a Mellanox® MC2206130-003 compatible 40GBase-CU QSFP+ to QSFP+ direct attach cable that operates over passive copper with a maximum reach of 3.0m (9.8ft). It has been programmed, uniquely serialized, and data-traffic and application tested to ensure it is 100% compliant and functional. This direct attach cable is built to comply with MSA (Multi-Source Agreement) standards. We stand behind the quality of our products and proudly offer a limited lifetime warranty.

Skylane's transceivers are RoHS compliant and lead-free.

Features:

- Full duplex 4 channel parallel passive optical cable
- SFF-8436 QSFP+ compliant
- Transmission data rate up to 10.3Gbps per channel
- Low power consumption
- Housing isolated from connector ground
- Hot pluggable electrical interface
- 3.3V power supply voltage
- Operating Temperature: 0 to 70 Celsius
- RoHS Compliant and Lead-Free

Applications:

- Serial Data Transmission

For your product safety, please read the following information carefully before any manipulation of the transceiver:

ESD

This transceiver is specified as ESD threshold 1kV for SFI pins and 2kV for all others electrical input pins, tested per MIL-STD-883G, Method 3015.4 /JESD22-A114-A (HBM). However, normal ESD precautions are still required during the handling of this module.

LASER SAFETY

This is a Class1 Laser Product according to IEC 60825-1:2007. This product complies with 21 CFR 1040.10 and 1040.11 except for deviations pursuant to Laser Notice No. 50, dated (June 24, 2007).

The optical ports of the module need to be terminated with an optical connector or with a dust plug in order to avoid contamination.

Specifications

Parameter	Specifications	Unit
Minimum Dielectric Withstand Voltage	300	VDC
Insulation Resistance	1000	MΩ
Current Rating	0.5 Amp Minimum/Signal Contact	
Operating Temperature	0 to 70	°C
Flammability Rating (Plastics)	UL 94	
Shield	Braid/Foil	
Connector		
Back Shell Material	Nickel-Plated Zinc Diecast	
Contact Material	PCB with Gold-Plated Pads	
Maximum Insertion Force	40	N
Maximum Withdrawal Force	30	N
Durability	250	Cycles
Tightest Recommended Vertical Spacing (Belly-to-Belly)	11.80	mm
Tightest Recommended Vertical Spacing (Stacked)	17.50	mm
Cable		
Conductor	Solid	
Wire Gauge	28	AWG
Impedance	100±5	Ω
Construction	Twinaxial	
Jacket Type	PVC	

Mechanical Specifications

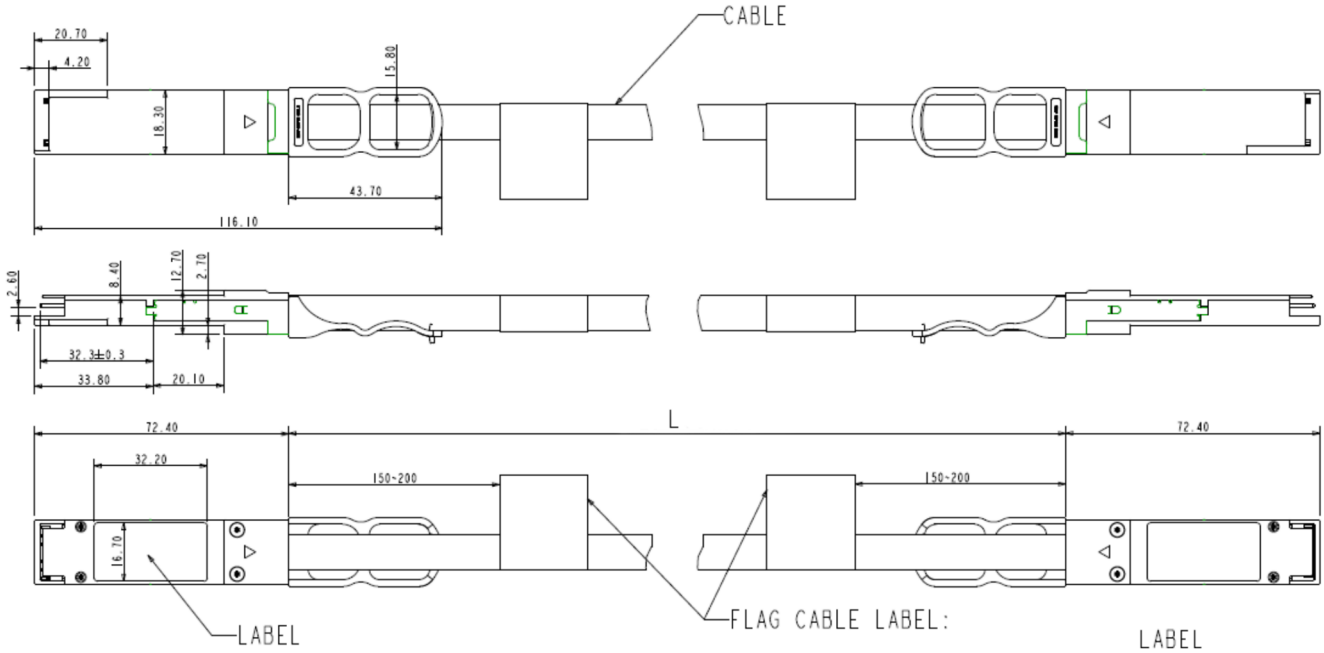

About Skylane Optics

Skylane is a leading provider of transceivers for optical communication.

We offer an extensive portfolio for the enterprise, access, datacenter and metropolitan fiber optical market as well as for smart home applications and home networks.

We cover the European, South American and North American market with a strong partner network and have offices in Belgium, Brazil, Sweden and USA.

Our offerings are characterized by high quality and performance. In combination with our strong technical support, we enable our customers to build cost optimized network solutions.

We offer an extensive range of high-quality products including transceivers (Optical and copper), Active Optical Cable (AOC), Direct Attach Cable (DAC), Mux/Demux, Coding Box.