DSFP-Q56-100GB-AOC20M-SKY

MSA Compliant 100GBase-AOC DSFP to QSFP56 Active Optical Cable (850nm, MMF, 20m, CMIS 4.0)

Product Description

This is an MSA compliant 100GBase-AOC DSFP to QSFP56 active optical cable that operates over multi-mode fiber with a maximum reach of 20.0m (65.6ft). It has been programmed, uniquely serialized, and data-traffic and application tested to ensure it is 100% compliant and functional. This active optical cable is built to comply with MSA (Multi-Source Agreement) standards. We stand behind the quality of our products and proudly offer a limited lifetime warranty.

Skylane's transceivers are RoHS compliant and lead-free.

Features:

- 2 Independent Parallel Optical Channels
- Hot-Pluggable
- Each Channel Data Rate Up to 26.56GBaud
- CML Compatible Electrical I/O
- DSFP MSA and CMIS 4.0 Compliance in DSFP End
- Up to 100m Link Over OM4 Multi-Mode Fiber
- Operating Temperature: 0 to 70 Celsius
- QSFP56 MSA and SFF-8636 Compliance in QSFP56 End
- RoHS Compliant and Lead-Free

Applications:

- 100GBase Ethernet

For your product safety, please read the following information carefully before any manipulation of the transceiver:

ESD

This transceiver is specified as ESD threshold 1kV for SFI pins and 2kV for all others electrical input pins, tested per MIL-STD-883G, Method 3015.4 /JESD22-A114-A (HBM). However, normal ESD precautions are still required during the handling of this module.

LASER SAFETY

This is a Class1 Laser Product according to IEC 60825-1:2007. This product complies with 21 CFR 1040.10 and 1040.11 except for deviations pursuant to Laser Notice No. 50, dated (June 24, 2007).

The optical ports of the module need to be terminated with an optical connector or with a dust plug in order to avoid contamination.

Absolute Maximum Ratings

Parameter	Symbol	Min.	Max.	Unit	Notes
Storage Ambient Temperature	Tstg	-40	+85	ºC	
Relative Humidity – Storage	RHs	0	85	%	1
Relative Humidity – Operating	RHo	0	85	%	1
Module Supply Voltage	Vcc	-0.5	3.6	V	

Notes:

1. RH is a non-condensing condition.
2. Exceeding the Absolute Maximum Ratings may cause irreversible damage to the device. The device is not intended to be operated under the condition of simultaneous Absolute Maximum Ratings, a condition which may cause irreversible damage to the device.

Recommended Operating Conditions

Parameter	Symbol	Min.	Typ.	Max.	Unit	Notes
Operating Case Temperature	Tc	0		70	ºC	1
Module Supply Voltage	Vcc	3.135	3.3	3.465	V	
Power Consumption	P			3	W	2
				3	W	3
PAM4 Signaling Rate Per Lane	S		26.56		GBaud	4

Notes:

1. Temperature range = C.
2. DSFP end.
3. QSFP56 end.
4. ±100ppm.

Cable Specifications

Parameter	Value
Minimum Bend Radius (mm)	30
Cable Diameter (mm)	3.0 ± 0.15

Electrical Characteristics

Parameter	Symbol	Min.	Typ.	Max.	Unit	Notes
Transmitter (Host Rx)						
Tx_Data Differential Input Voltage	VIN	900	800	2000	mV	
Tx_Data Differential Input Impedance	ZIN	90	100	110	Ω	
Signaling Rate Per Lane	S		26.56		GBaud	1
Receiver						
Rx_Data Differential Output Voltage	VOUT			900	mV	
Rx_Data Differential Output Impedance	ZOUT	90	100	110	Ω	
Signaling Rate Per Lane	S		26.56		GBaud	1
Link BER	BER			$2.4E^{-4}$		2

Notes:

1. ±100ppm.
2. Better than $2.4E^{-4}$ @26.56GBaud PRBS31.

DSFP Pin Descriptions

Pin	Symbol	Name/Description
1	TD2-	Transmitter Inverted Data Input Lane 2.
2	TD2+	Transmitter Non-Inverted Data Input Lane 2.
3	GND	Module Ground.
4	SDA	2-Wire Serial Interface Data.
5	SCL	2-Wire Serial Interface Clock.
6	LPWn/PRSn	Low-Power Mode/ Module Present (MOD_ABS).
7	GND	Module Ground.
8	RD2+	Receiver Non-Inverted Data Output Lane 2.
9	RD2-	Receiver Inverted Data Output Lane 2.
10	GND	Module Ground.
11	GND	Module Ground.
12	RD1-	Receiver Inverted Data Output Lane 1.
13	RD1+	Receiver Non-Inverted Data Output Lane 1.
14	GND	Module Ground.
15	Vcc	Module 3.3V Supply.
16	Vcc	Module 3.3V Supply.
17	GND	Module Ground.
18	TD1+	Transmitter Non-Inverted Data Input Lane 1.
19	TD1-	Transmitter Inverted Data Input Lane 1.
20	GND	Module Ground.
21	INT/RSTn	Dual Function Module Interrupt and Reset Pin.

22	GND	Module Ground.

DSFP Pin Assignments

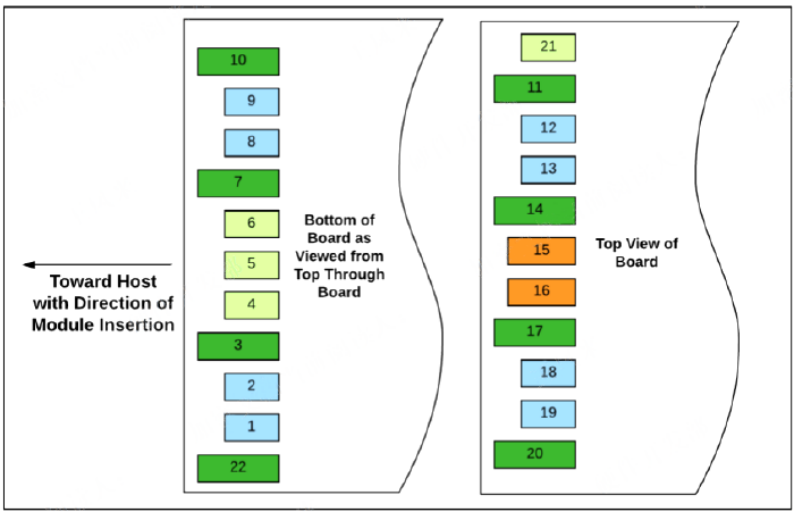

QSFP56 Pin Descriptions

Pin	Symbol	Name/Description	Notes
1	GND	Ground.	
2	Tx2n	Transmitter Inverted Data Input.	
3	Tx2p	Transmitter Non-Inverted Data Input.	
4	GND	Ground.	
5	Tx4n	Not Connected.	
6	Tx4p	Not Connected.	
7	GND	Ground.	
8	ModSelL	Module Select.	
9	ResetL	Module Reset.	
10	VccRx	Receiver +3.3V DC Power Supply.	
11	SCL	I^2C Serial Clock.	
12	SDA	I^2C Serial Data.	
13	GND	Ground.	
14	Rx3p	Not Connected.	
15	Rx3n	Not Connected.	
16	GND	Ground.	
17	Rx1p	Receiver Non-Inverted Differential Output.	
18	Rx1n	Receiver Inverted Differential Output.	
19	GND	Ground.	
20	GND	Ground.	

21	Rx2n	Receiver Inverted Differential Output.	
22	Rx2p	Receiver Non-Inverted Differential Output.	
23	GND	Ground.	
24	Rx4n	Not Connected.	
25	Rx4p	Not Connected.	
26	GND	Ground.	
27	ModPrsL	Module Present.	
28	IntL	Interrupt.	
29	VccTx	Transmitter +3.3V DC Power Supply.	
30	Vcc1	+3.3V DC Power Supply.	
31	LPMode	Low-Power Mode.	
32	GND	Ground.	
33	Tx3p	Not Connected.	
34	Tx3n	Not Connected.	
35	GND	Ground.	
36	Tx1p	Transmitter Non-Inverted Data Input.	
37	Tx1n	Transmitter Inverted Data Input.	
38	GND	Ground.	

QSFP56 Pin Assignments

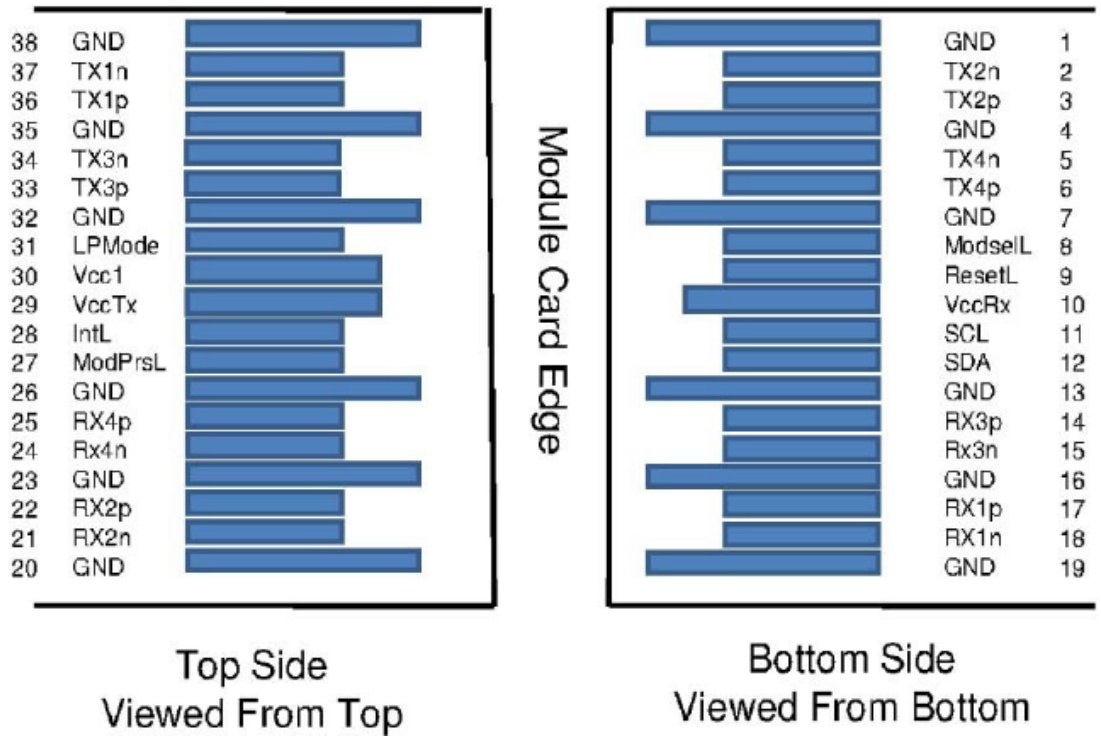

DSFP Block Diagram

QSFP56 Block Diagram

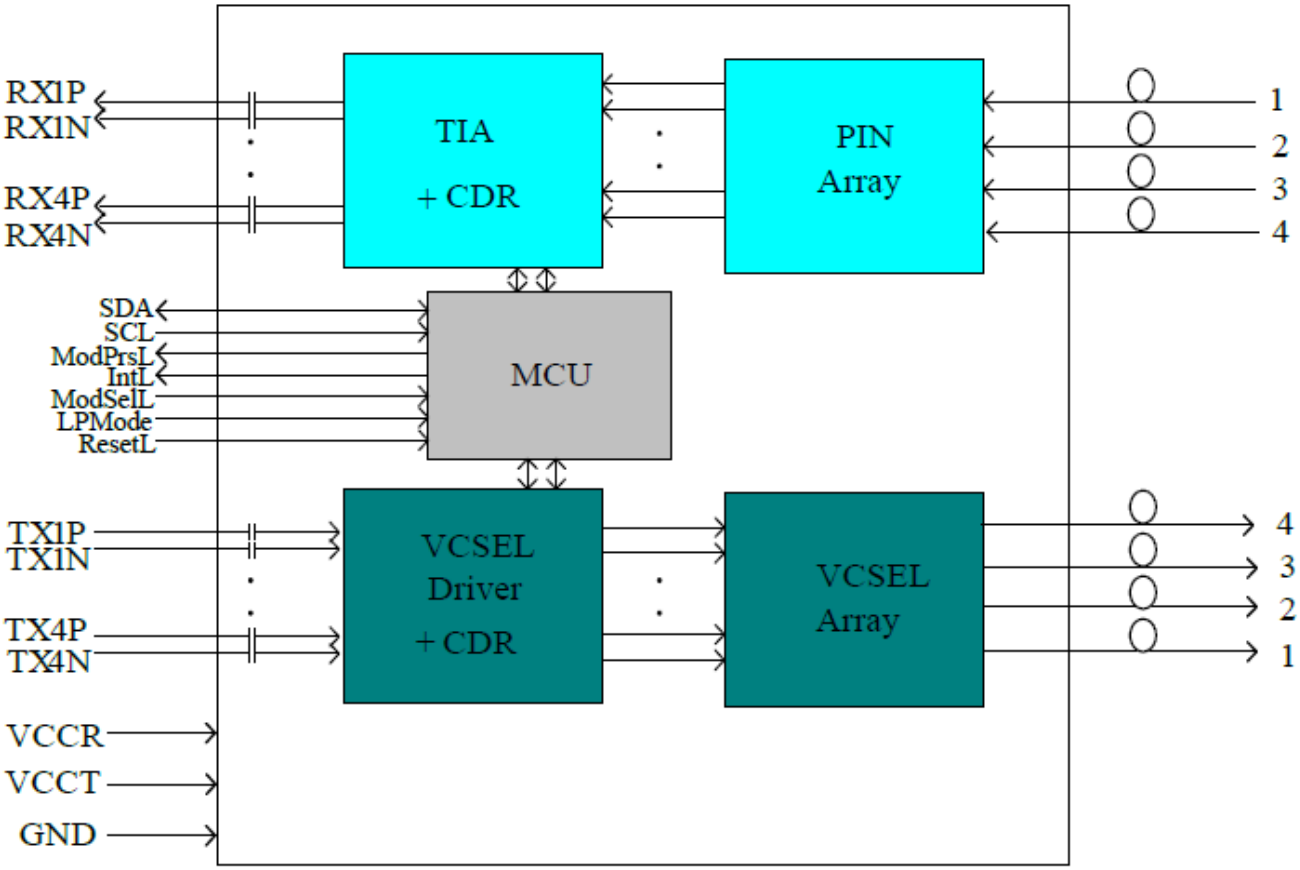

DSFP Electrical Interface

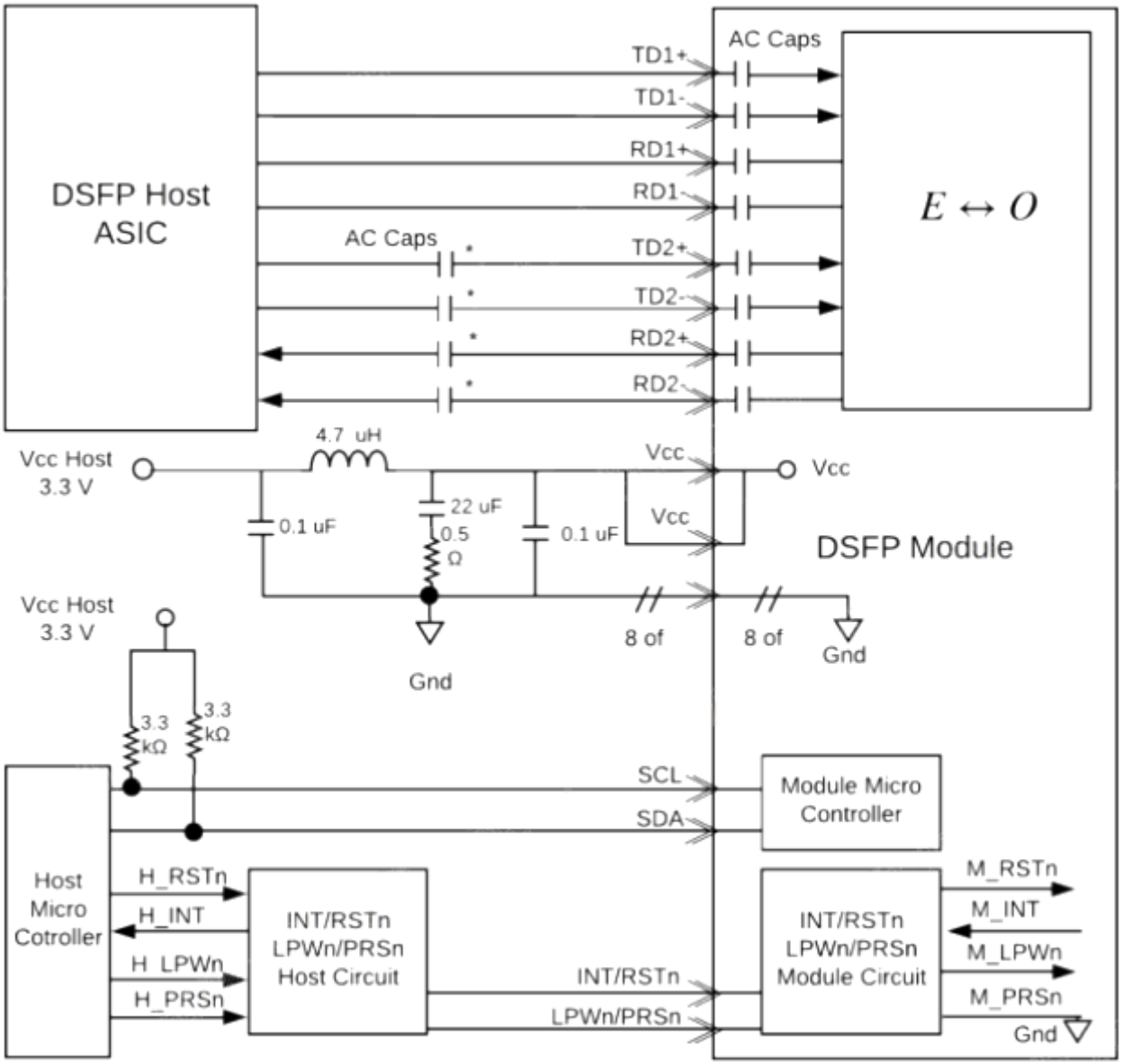

* Host AC Caps allow SFP+ backwards compatibility. If SFP+ modules will never be plugged in, the host AC Caps can be omitted.

QSFP56 Electrical Interface

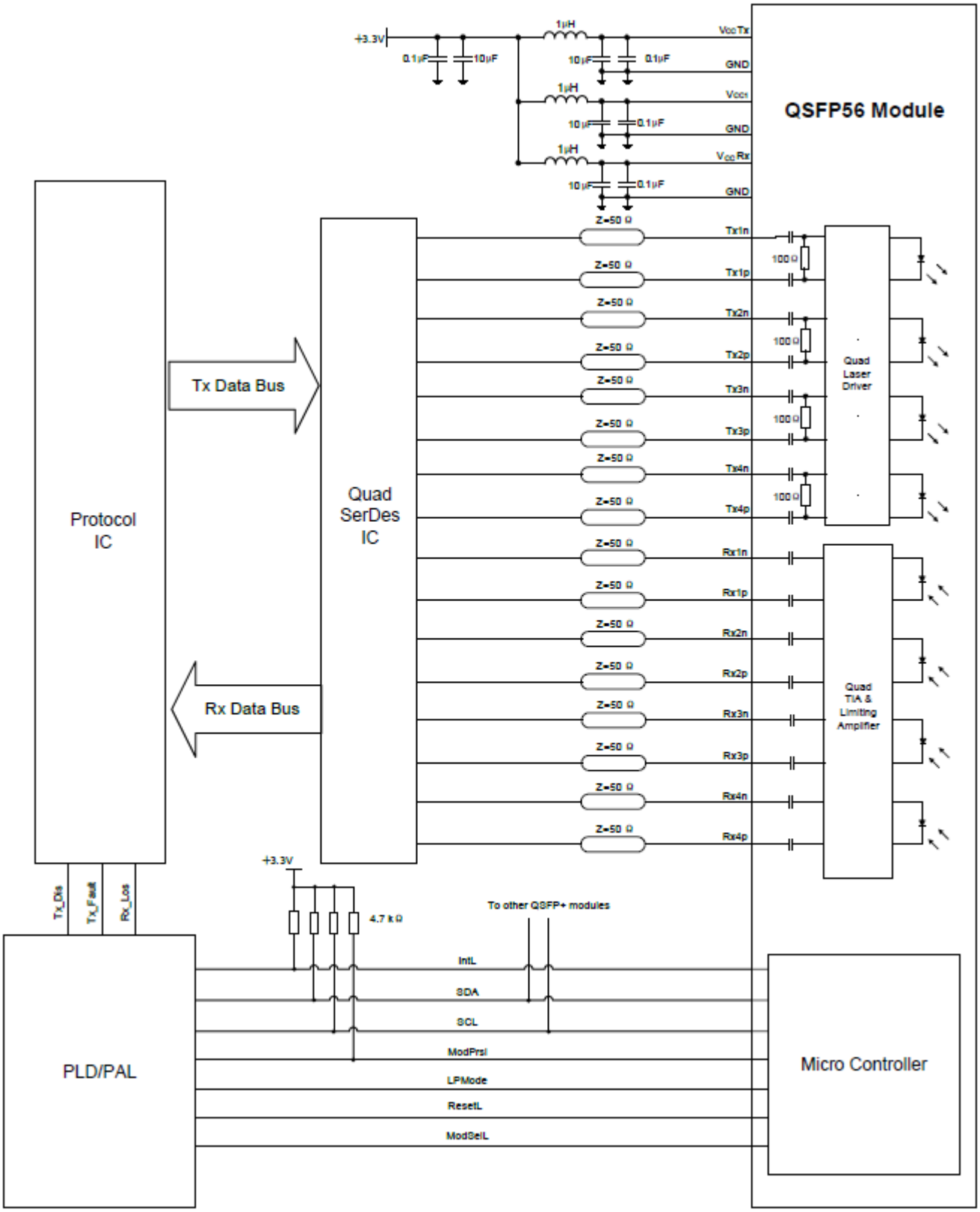

DSFP Mechanical Specifications

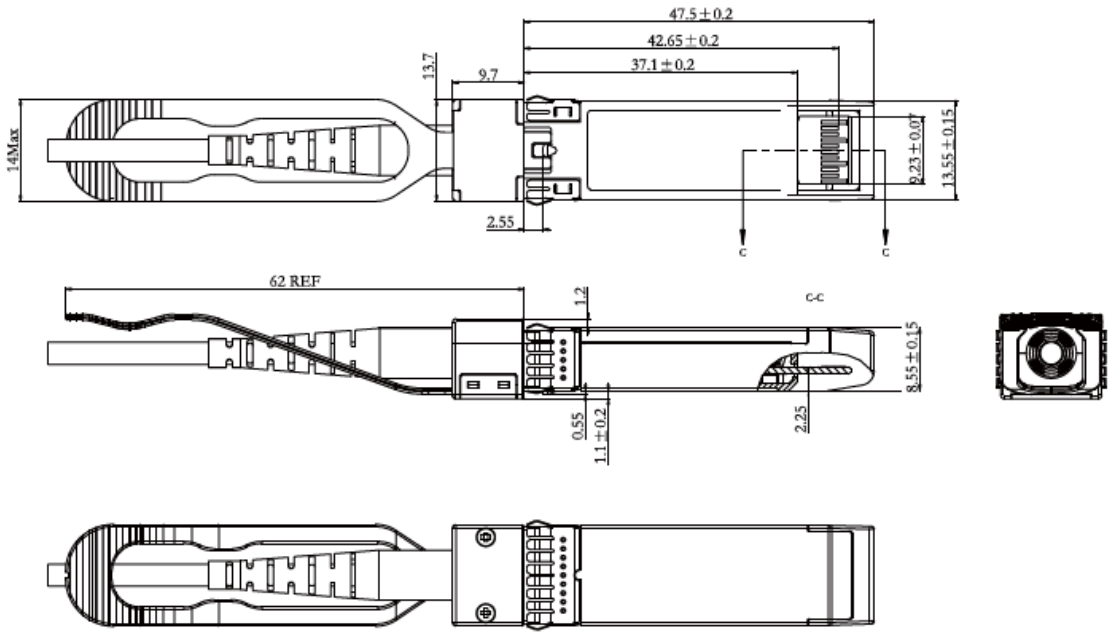

Notes:

1. Dimensions are mm.
2. Tolerance is ±0.1mm.
3. Others according to MSA drawing.

QSFP56 Mechanical Specifications

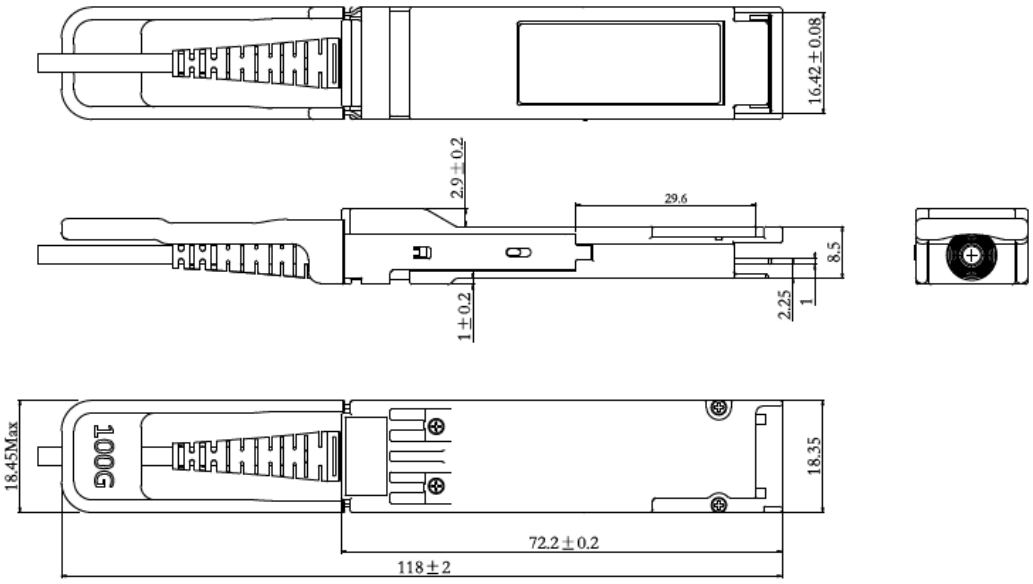

Notes:

1. Dimensions are mm.
2. Tolerance is ±0.1mm.
3. Others according with SFF-8661 MSA or customer specifications.

About Skylane Optics

Skylane is a leading provider of transceivers for optical communication.

We offer an extensive portfolio for the enterprise, access, datacenter and metropolitan fiber optical market as well as for smart home applications and home networks.

We cover the European, South American and North American market with a strong partner network and have offices in Belgium, Brazil, Sweden and USA.

Our offerings are characterized by high quality and performance. In combination with our strong technical support, we enable our customers to build cost optimized network solutions.

We offer an extensive range of high-quality products including transceivers (Optical and copper), Active Optical Cable (AOC), Direct Attach Cable (DAC), Mux/Demux, Coding Box.