# DAC-Q28-4SFP28-25G-5M-SKY

Dell® DAC-Q28-4SFP28-25G-5M Compatible 100GBase-CU QSFP28 to 4xSFP28 Direct Attach Cable (Passive Twinax, 5m)

**Product Description**

This is a Dell® DAC-Q28-4SFP28-25G-5M compatible 100GBase-CU QSFP28 to 4xSFP28 direct attach cable that operates over passive copper with a maximum reach of 5.0m (16.4ft). It has been programmed, uniquely serialized, and data-traffic and application tested to ensure it is 100% compliant and functional. This direct attach cable is built to comply with MSA (Multi-Source Agreement) standards. We stand behind the quality of our products and proudly offer a limited lifetime warranty.

Skylane's transceivers are RoHS compliant and lead-free.

**Features:**

- QSFP28 End: Compliant with QSFP28 MSA specifications
- 4 independent duplex channels operating at 25Gbps
- SFP28 End: Compliant with SFP28 MSA specifications
- 100 Ohm differential impedance
- All-metal housing for superior EMI performance
- AC coupled inputs and outputs
- Operating temperature range: 0 to 70 Celsius
- Single power supply 3.3V, low power consumption
- RoHS Compliant and Lead Free

**Applications:**

- 100Gigabit Ethernet
- Infiniband EDR
- Serial Data Transmission

*For your product safety, please read the following information carefully before any manipulation of the transceiver:*

*ESD*

*This transceiver is specified as ESD threshold 1kV for SFI pins and 2kV for all others electrical input pins, tested per MIL-STD-883G, Method 3015.4 /JESD22-A114-A (HBM). However, normal ESD precautions are still required during the handling of this module.*

*LASER SAFETY*

*This is a Class1 Laser Product according to IEC 60825-1:2007. This product complies with 21 CFR 1040.10 and 1040.11 except for deviations pursuant to Laser Notice No. 50, dated (June 24, 2007).*

***The optical ports of the module need to be terminated with an optical connector or with a dust plug in order to avoid contamination.***

## General Specifications

| Parameter | Symbol | Min. | Typ. | Max. | Unit | Notes |
|---|---|---|---|---|---|---|
| **Bit Error Rate** | BER | | | $10^{-12}$ | | |
| **Operating Temperature** | Tc | 0 | | 70 | °C | 1 |
| **Storage Temperature** | Tstg | -40 | | 85 | °C | 2 |
| **Input Voltage** | Vcc | 3.14 | 3.3 | 3.46 | V | |
| **Product Weight** | Gd | | 320 | | g/PCS | |
| **Cable Weight** | Gc | | 175 | | g/M | 3 |
| **SFP28 End Dust Cap Weight** | Gs | | 0.80 | | g/PCS | |
| **QSFP28 End Dust Cap Weight** | Gq | | 1.40 | | g/PCS | |
| **Cable Impedance** | Z | 90 | 100 | 110 | Ω | |

**Notes:**

1. Case temperature.
2. Ambient temperature.
3. The weight of unit length cable (four sticks). For example, the weight of a 5m cable is 320+175*(5-1)+0.80*4+1.40=1024.6g.

## Cable Specifications

| Cable Length | Wire Gauge AWG | Insertion Loss Level |
|---|---|---|
| **5m** | 26AWG | CA-25G-L |

**QSFP28 Pin Descriptions**

| Pin | Symbol | Name/Description | Notes |
|---|---|---|---|
| **1** | GND | Module Ground. | 5 |
| **2** | Tx2- | Transmitter Inverted Data Input. LAN2. | |
| **3** | Tx2+ | Transmitter Non-Inverted Data Input. LAN2. | |
| **4** | GND | Module Ground. | 5 |
| **5** | Tx4- | Transmitter Inverted Data Input. LAN4. | |
| **6** | Tx4+ | Transmitter Non-Inverted Data Input. LAN4. | |
| **7** | GND | Module Ground. | 5 |
| **8** | ModselL | Module Select Pin. The module responds to 2-wire serial communication when low level. | 1 |
| **9** | ResetlL | Module Reset. | 2 |
| **10** | VccRx | +3.3V Receiver Power Supply. | |
| **11** | SCL | 2-Wire Serial Interface Clock. | |
| **12** | SDA | 2-Wire Serial Interface Data. | |
| **13** | GND | Module Ground. | 5 |
| **14** | Rx3+ | Receiver Non-Inverted Data Output. LAN3. | |
| **15** | Rx3- | Receiver Inverted Data Output. LAN3. | |
| **16** | GND | Module Ground. | 5 |
| **17** | Rx1+ | Receiver Non-Inverted Data Output. LAN1. | |
| **18** | Rx1- | Receiver Inverted Data Output. LAN1. | |
| **19** | GND | Module Ground. | 5 |
| **20** | GND | Module Ground. | 5 |
| **21** | Rx2- | Receiver Inverted Data Output. LAN2. | |
| **22** | Rx2+ | Receiver Non-Inverted Data Output. LAN2. | |
| **23** | GND | Module Ground. | 5 |
| **24** | Rx4- | Receiver Inverted Data Output. LAN4. | |
| **25** | Rx4+ | Receiver Non-Inverted Data Output. LAN4. | |
| **26** | GND | Module Ground. | 5 |
| **27** | ModPrsL | The module is inserted into the indicate pin and grounded within the module. | 3 |
| **28** | IntL | Interrupt. | 4 |
| **29** | VccTx | +3.3V Transmitter Power Supply. | |
| **30** | Vcc1 | +3.3V Power Supply. | |
| **31** | LPMode | Low-Power Mode. | 5 |
| **32** | GND | Module Ground. | 5 |
| **33** | Tx3+ | Transmitter Non-Inverted Data Input. LAN3. | |
| **34** | Tx3- | Transmitter Inverted Data Input. LAN3. | |

| | | | |
|---|---|---|---|
| **35** | GND | Module Ground. | 5 |
| **36** | Tx1+ | Transmitter Non-Inverted Data Input. LAN1. | |
| **37** | Tx1- | Transmitter Inverted Data Input. LAN1. | |
| **38** | GND | Module Ground. | 5 |

**Notes:**

1. ModSelL is the input pin. The module responds to 2-wire serial communication commands when it is held “low” by the host. ModSelL allows multiple QSFP modules to be used on a single 2-wire interface bus. If ModSelL is “high,” the module will not respond to any 2-wire interface communication from the host. ModSelL has internal pull-up resistors in the module.
2. The module restart pin, when the low level on the ResetL pin lasts longer than the minimum pulse length, resets the module and restores all user modules to their default state. When performing reset device, the host should ignore all status bits. Until the module reset interrupt is completed, please note that, during hot plugging, the module will issue this information to complete the reset interrupt without resetting.
3. This pin is active “high,” indicating that the module is running under a low-power module. The signal has no effect on the functionality of this product.
4. IntL is the output pin, which is the open collector output and must be pulled up to Vcc with a 4.7kΩ to 10kΩ resistor on the motherboard. When it is “low,” it indicates that the module may malfunction. The host uses a 2-wire serial interface to identify the interrupt source.
5. The circuit ground is internally isolated from the chassis ground.

**Electrical Pad Layout (QSFP28 End)**

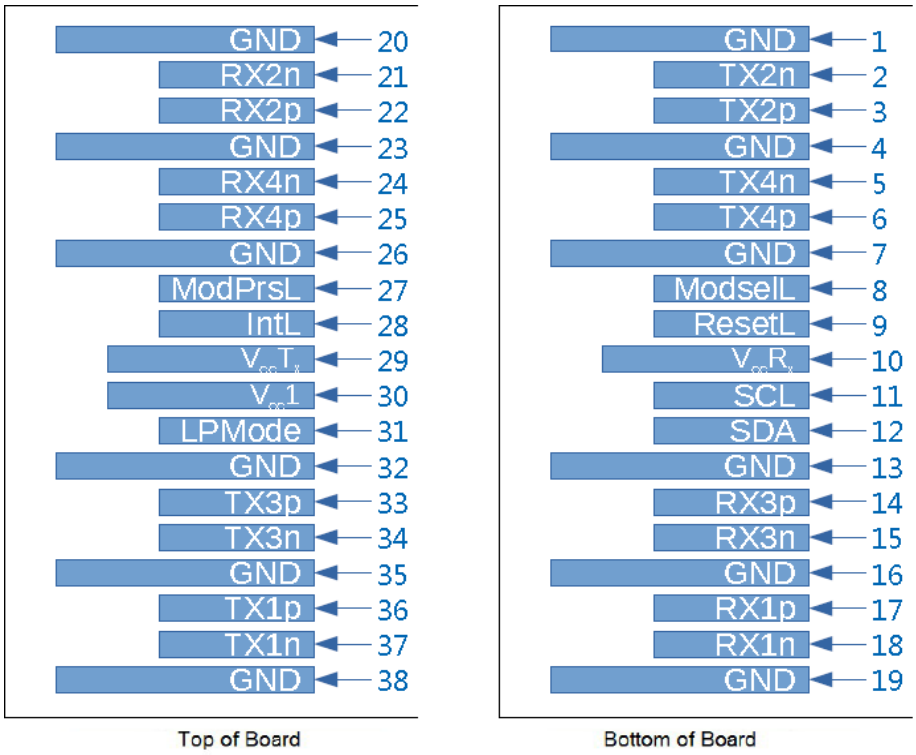


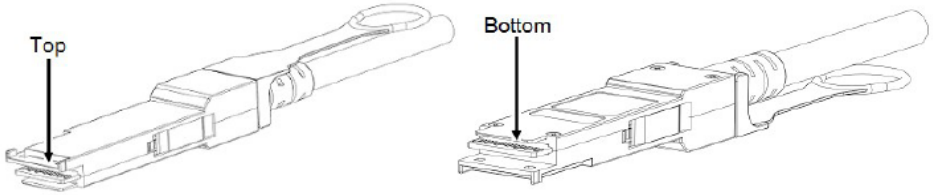

**SFP28 Pin Descriptions**

| Pin | Symbol | Name/Description | Notes |
|---|---|---|---|
| **1** | VeeT | Transmitter Ground (Common with Receiver Ground). | |
| **2** | Tx_Fault | Not Used. Transmitter Failure Alarm. | 1 |
| **3** | Tx_Disable | Not Used. The signal turns off the module transmitter when it is “high” or “open.” | 2 |
| **4** | SDA | Data Line for Serial ID. | |
| **5** | SCL | Clock Line for Serial ID. | |
| **6** | MOD_ABS | Module Absent. Grounded within the module. | |
| **7** | RS0 | No Connection Required. | 1 |
| **8** | LOS | Loss of Signal Indication. “Logic 0” indicates normal operation. | 2 |
| **9** | RS1 | No Connection Required. | 1 |
| **10** | VeeR | Receiver Ground (Common with Transmitter Ground). | |
| **11** | VeeR | Receiver Ground (Common with Transmitter Ground). | |
| **12** | RD- | Receiver Inverted Data Out. AC Coupled. | |
| **13** | RD+ | Receiver Non-Inverted Data Out. AC Coupled. | |
| **14** | VeeR | Receiver Ground (Common with Transmitter Ground). | |
| **15** | VccR | Receiver Power Supply. | |
| **16** | VccT | Transmitter Power Supply. | |
| **17** | VeeT | Transmitter Ground (Common with Receiver Ground). | |
| **18** | TD+ | Transmitter Non-Inverted Data In. AC Coupled. | |
| **19** | TD- | Transmitter Inverted Data In. AC Coupled. | |
| **20** | VeeT | Transmitter Ground (Common with Receiver Ground). | |

**Notes:**

1. The circuit ground is isolated from the chassis ground.
2. Should be pulled up with 4.7kΩ to 10kΩ on the host board to a voltage between 2V and 3.6V.

## Electrical Pad Layout (SFP28 End)

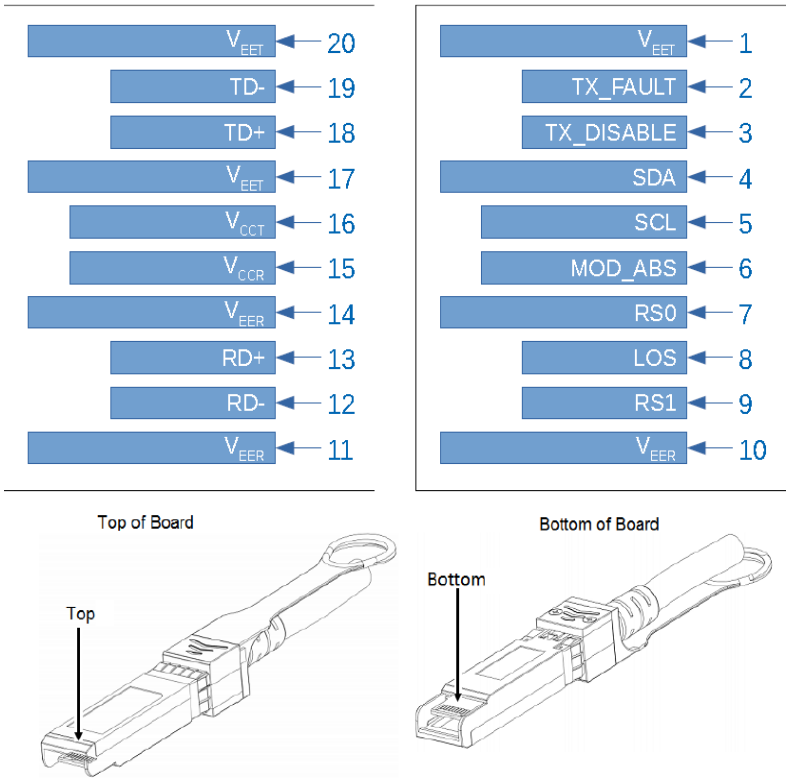


## Mechanical Dimensions

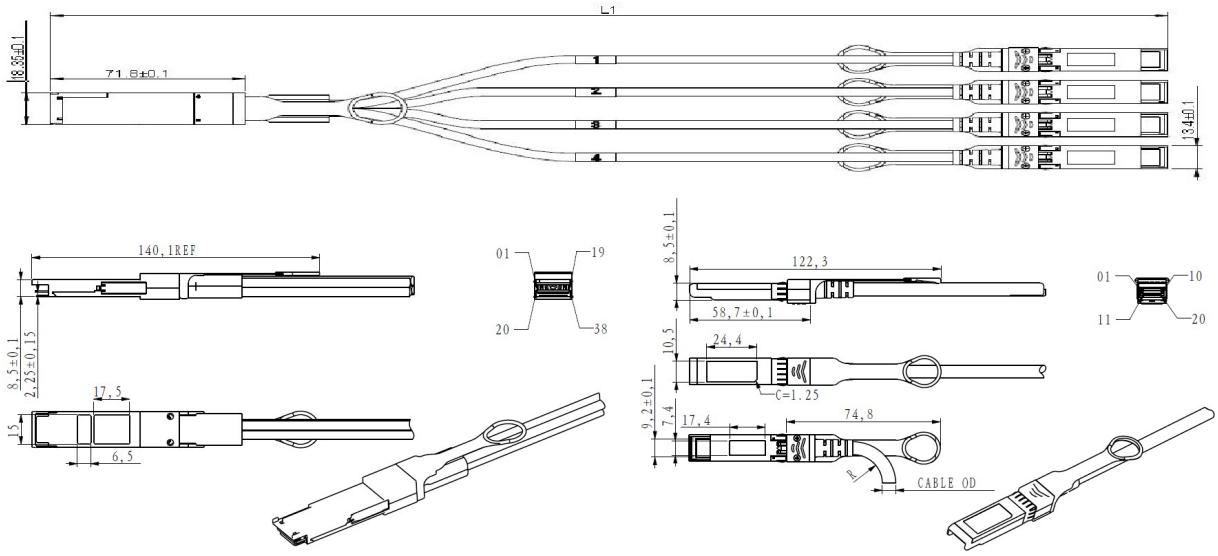


All Dimensions Are ±0.2mm Unless Otherwise Specified
Unit: mm

# About Skylane Optics

Skylane is a leading provider of transceivers for optical communication.

We offer an extensive portfolio for the enterprise, access, datacenter and metropolitan fiber optical market as well as for smart home applications and home networks.

We cover the European, South American and North American market with a strong partner network and have offices in Belgium, Brazil, Sweden and USA.

Our offerings are characterized by high quality and performance. In combination with our strong technical support, we enable our customers to build cost optimized network solutions.

We offer an extensive range of high-quality products including transceivers (Optical and copper), Active Optical Cable (AOC), Direct Attach Cable (DAC), Mux/Demux, Coding Box.