CFP2-100GB-SR10-SKY

MSA Compliant 100GBase-SR10 CFP2 Transceiver (MMF, 850nm, 150m, MPO, DOM)

Product Description

This MSA compliant CFP2 transceiver provides 100GBase-SR10 throughput up to 150m over multi-mode fiber (MMF) using a wavelength of 850nm via an MPO connector. It is built to MSA standards and is uniquely serialized and data-traffic and application tested to ensure that they will integrate into your network seamlessly. Digital optical monitoring (DOM) support is also present to allow access to real-time operating parameters. We stand behind the quality of our products and proudly offer a limited lifetime warranty.

Skylane's transceivers are RoHS compliant and lead-free.

Features:

- CFP MSA 1.0 Compliance
- MPO Connector
- Commercial Temperature 0 to 70 Celsius
- Multi-mode Fiber
- Hot Pluggable
- Excellent ESD Protection
- Metal with Lower EMI
- RoHS Compliant and Lead Free

Applications:

- 100GBase Ethernet
- Access and Enterprise

For your product safety, please read the following information carefully before any manipulation of the transceiver:

ESD

This transceiver is specified as ESD threshold 1kV for SFI pins and 2kV for all others electrical input pins, tested per MIL-STD-883G, Method 3015.4 /JESD22-A114-A (HBM). However, normal ESD precautions are still required during the handling of this module.

LASER SAFETY

This is a Class1 Laser Product according to IEC 60825-1:2007. This product complies with 21 CFR 1040.10 and 1040.11 except for deviations pursuant to Laser Notice No. 50, dated (June 24, 2007).

The optical ports of the module need to be terminated with an optical connector or with a dust plug in order to avoid contamination.

Absolute Maximum Ratings

Parameter	Symbol	Min.	Typ	Max.	Unit
Maximum Supply Voltage	Vcc	-0.5		3.6	V
Storage Temperature	T_S	-40		85	°C
Operating Case Temperature	Tc	0		70	°C
Relative Humidity	R_H	0		**85**	**%**
Data Rate	D_R		103	112	Gb/s
Receiver Damage Threshold per Lane	PRdmg	5			

Electrical Characteristics

Parameter	Symbol	Min.	Typ.	Max.	Unit	Notes
Power Supply Voltage	Vcc	3.14		3.47	V	
Power Consumption	P_{DISS}			4	W	
Transmitter (per lane)						
Data Rate Per Lane	DRPL		10.3125	11.1810	Gb/s	1
Input voltage tolerance	VIN	-0.3		4	V	
Differential data input swing	VIN,PP	120		1200	mVpp	2
Differential input threshold	VIN,TH		50		mV	
J2 Jitter Tolerance	JT2	0.17			UI	
J9 Jitter Tolerance	JT9	0.29			UI	
Receiver (per lane)						
Output voltage	VOUT	-0.3		4.0	V	
Differential data output swing	VOUT,PP	300		800	mVpp	3
output voltage (RMS)	PSEN2			7.5	mV	
Termination mismatch at 1 MHx	PPx			5	%	
Output rise time and fall time	Tr, Tf		28		Ps	4
J2 Jitter output	JOT2			0.42	UI	
J9 Jitter output	JOT9			0.65	UI	
Power Supply Ripple Tolerance	PRS	Per CFP MSA			mVpp	

Notes:

1. +/- 100ppm at 10.3125 Gb/s and +/-20ppm at 11.1810 Gb/s.
2. After internal AC coupling. Self-biasing 100Ωdifferential input.
3. AC coupled with 100Ωdifferential output impedance. Limiting output.
4. 20%~80%

Optical Characteristics (T_{OP} = 0 to 70 °C, V_{CC} = 3.13 to 3.47 V)

Parameter	Symbol	Min.	Typ.	Max.	Unit	Notes
Transmitter (per lane)						
Data Rate Per Lane	D_{RPL}		10.3125	11.1810	Gb/s	1
Center wavelength	λ	840	850	860	nm	
RMS Spectral Width	Δλ			0.65	nm	
Average Power per Lane	PAVEp	-8		1	dBm	
Transmit OMA per Lane	P_{OMA}	-6		3.0	dBm	2
Average launch Power of OFF	D_P			-30	dB	
Peak Power per Lane	P_P			4.0	dBm	
TDP per Lane	T_{DP}			4	dBm	
Extinction Ratio	ER	3.0			dB	
Return Loss Tolerance				12	dB	
Relative Intensity Noise	R_{IN}			-128	dB/Hz	3
Transmitter eye mask definition {X1, X2, X3, Y1, Y2, Y3}		0.23, 0.34, 0.43, 0.27, 0.35, 0.4				
Receiver (per lane)						
Center wavelength	λ	840	850	860	nm	
Receiver Sensitivity per Lane	PSEN1			-9.9	dBm	4
Receiver Sensitivity (OMA) per Lane	PSEN2			-5.4	dBm	
Peak Power, per lane	P_{Px}			4	dBm	
Overload, per lane	P_{AVE}	1			dBm	
Receiver Reflectance	R_{rx}			-12	dB	
Dispersion penalty, per lane	T_{DP}			1.9	dB	
Stressed eye J2 jitter, per Lane	J_{E2P}		0.35		UI	
Stressed eye J9 jitter, per Lane	J_{E9P}		0.47		UI	
Jitter tolerance [OMA], per lane	J_{TP}		-5.4		dBm	
LOS De-Assert	Pa	-11			dBm	
LOS Assert	Pd			-25	dBm	
LOS Hysteresis	Pd-Pa	0.5			dB	

Notes:

1. Transmitter consists of 10 lasers operating at a maximum rate of 11.1810 Gb/s each.
2. Even if TDP is <0.9dB, the OMA min must exceed this value.
3. RIN is scaled by 10*log (10/4) to maintain SNR outside of transmitter.
4. Measured using DUT Tx and DUT Rx; no golden transmitters shall be used.

Pin Descriptions

The CFP2 connector has 104 pins which are arranged in Top and Bottom rows.

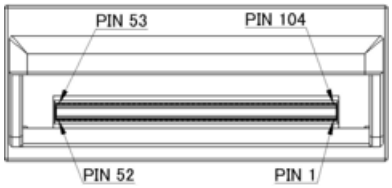

Pin #	Description	Pin #	Description
1	GND	**104**	GND
2	TX9n	**103**	TX7n
3	TX9p	**102**	TX7p
4	GND	**101**	GND
5	TX8n	**100**	TX6n
6	TX8p	**99**	TX6p
7	3.3V_GND	**98**	GND
8	3.3V_GND	**97**	TX5n
9	3.3V	**96**	TX5p
10	3.3V	**95**	GND
11	3.3V	**94**	TX4n
12	3.3V	**93**	TX4p
13	3.3V_GND	**92**	GND
14	3.3V_GND	**91**	TX3n
15	VND_IO_A	**90**	TX3p
16	VND_IO_B	**89**	GND
17	PRG_CNTL1	**88**	TX2n
18	PRG_CNTL2	**87**	TX2p
19	PRG_CNTL3	**86**	GND
20	PRG_ALRM1	**85**	TX1n
21	PRG_ALRM2	**84**	TX1p
22	PRG_ALRM3	**83**	GND
23	GND	**82**	TX0n
24	TX_DIS	**81**	TX0p
25	RX_LOS	**80**	GND
26	MOD_LOPWR	**79**	(REFCLKn)
27	MOD_ABS	**78**	(REFCLKp)
28	MOD_RSTn	**77**	GND
29	GLB_ALRMn	**76**	RX7n
30	GND	**75**	RX7p
31	MDC	**74**	GND
32	MDIO	**73**	RX6n
33	PRTADR0	**72**	RX6p
34	PRTADR1	**71**	GND

35	PRTADR2	**70**	RX5n
36	VND_IO_C	**69**	RX5p
37	VND_IO_D	**68**	GND
38	VND_IO_E	**67**	RX4n
39	3.3V_GND	**66**	RX4p
40	3.3V_GND	**65**	GND
41	3.3V	**64**	RX3n
42	3.3V	**63**	RX3p
43	3.3V	**62**	GND
44	3.3V	**61**	RX2n
45	3.3V_GND	**60**	RX2p
46	3.3V_GND	**59**	GND
47	RX9n	**58**	RX1n
48	RX9p	**57**	RX1p
49	GND	**56**	GND
50	RX8n	**55**	RX0n
51	RX8p	**54**	RX0p
52	GND	**53**	GND

Optical Lane Assignment (front view of MPO receptacle)

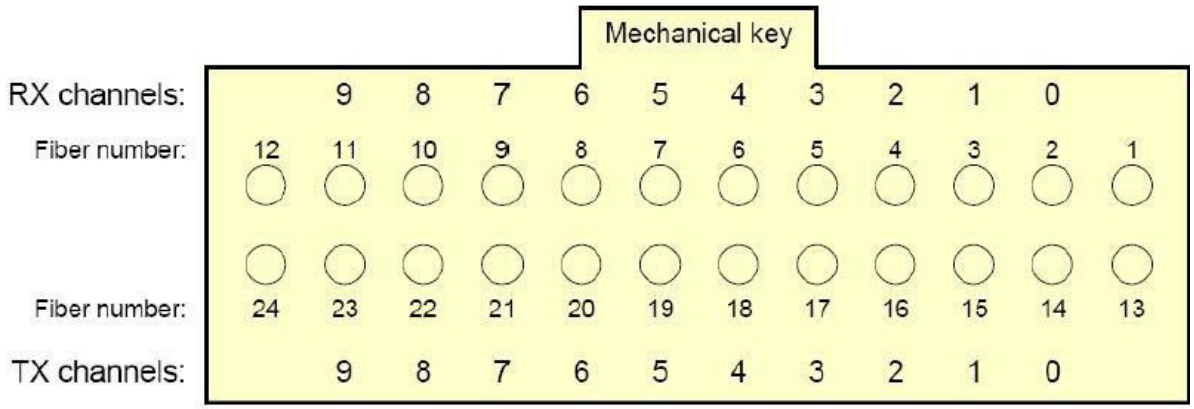

Fiber #	Channel	Electrical Pin	Fiber #	Channel	Electrical Pin
1	Unused		**13**	Unused	
2	RX0	54,55	**14**	TX0	81,82
3	RX1	57,58	**15**	TX1	84,85
4	RX2	60,61	**16**	TX2	87,88
5	RX3	63,64	**17**	TX3	90,91
6	RX4	66,67	**18**	TX4	93,94
7	RX5	69,70	**19**	TX5	96,97
8	RX6	72,73	**20**	TX6	99,100
9	RX7	75,76	**21**	TX7	102,103
10	RX8	51,50	**22**	TX8	6,5
11	RX9	48,47	**23**	TX9	3,2
12	Unused		**24**	Unused	

Functional Diagram

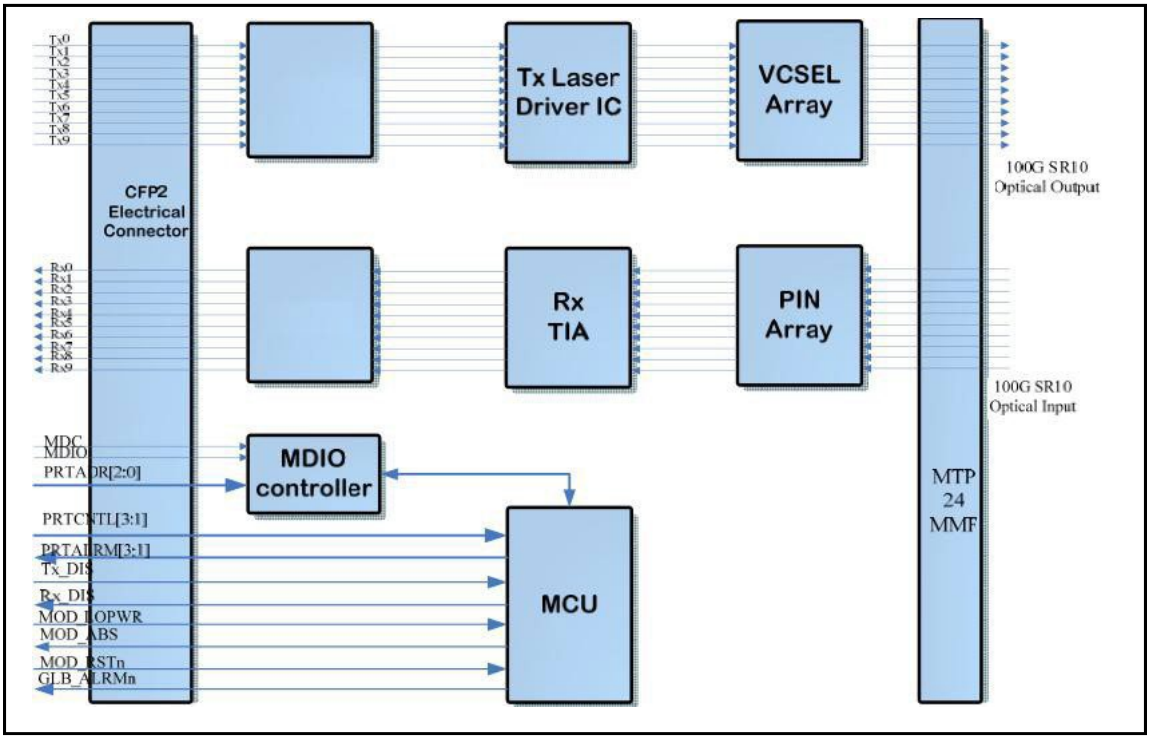

Mechanical Specifications

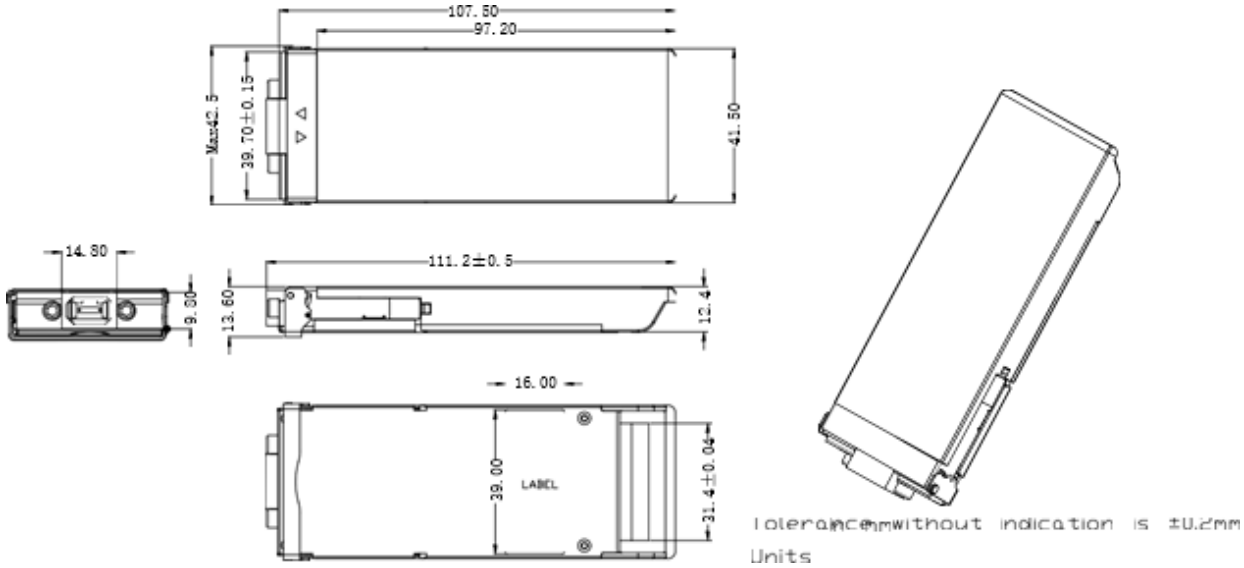

About Skylane Optics

Skylane is a leading provider of transceivers for optical communication.

We offer an extensive portfolio for the enterprise, access, datacenter and metropolitan fiber optical market as well as for smart home applications and home networks.

We cover the European, South American and North American market with a strong partner network and have offices in Belgium, Brazil, Sweden and USA.

Our offerings are characterized by high quality and performance. In combination with our strong technical support, we enable our customers to build cost optimized network solutions.

We offer an extensive range of high-quality products including transceivers (Optical and copper), Active Optical Cable (AOC), Direct Attach Cable (DAC), Mux/Demux, Coding Box.